EANCOM® 2002 S3

QUOTES

Quote message

Edition 2016

1. Introduction 2
2. Message Structure Chart 3
3. Branching Diagram 5
4. Segments Description 12
5. Segments Layout 18
6. Example(s) 88

1. Introduction

Status

MESSAGE TYPE	: QUOTES
REFERENCE DIRECTORY	: D.01B
EANCOM® SUBSET VERSION	: 004

Definition

A message which provides potential sellers with the ability to provide price, delivery schedule, available quantities, and other conditions for potential sales of goods or services.

Principles

The EANCOM subset of the UNSM Quotation is intended to be used in quotation transactions.
The following general principles apply:

- A potential seller may offer one or more goods items or services.
- A quotation may refer to goods items or services related to one or more delivery schedules, call-offs, etc.
- A quotation for cross border transactions may contain additional information for customs and/or statistical purposes.
- A quotation may be used for periodical transactions.

2. Message Structure Chart

Quotation Heading Section

UNH		1	M	1	- Message header
BGM		2	M	1	- Beginning of message
DTM		3	M	35	- Date/time/period
ALI	+	4	C	5	- Additional information
FTX		5	C	99	- Free text
SG1			C	9999	- RFF-DTM
RFF		6	M	1	- Reference
DTM		7	C	5	- Date/time/period
SG4			C	5	- CUX-DTM
CUX		8	M	1	- Currencies
DTM		9	C	5	- Date/time/period
SG5			C	10	- PAT-DTM
PAT	X	10	M	1	- Payment terms basis
DTM		11	C	5	- Date/time/period
SG6			C	10	- TOD-LOC
TOD		12	M	1	- Terms of delivery or transport
LOC		13	C	2	- Place/location identification
SG8	+		C	999	- RCS-DTM
RCS	+	14	M	1	- Requirements and conditions
DTM	+	15	C	5	- Date/time/period
SG11			C	99	- NAD-SG12-SG14
NAD		16	M	1	- Name and address
SG12			C	99	- RFF
RFF		17	M	1	- Reference
SG14			C	5	- CTA-COM
CTA		18	M	1	- Contact information
COM		19	C	5	- Communication contact
SG15			C	10	- TDT
TDT		20	M	1	- Details of transport

Quotation Detail Section

SG27			M	200000	- LIN-PIA-IMD-MEA-QTY-ALI-DTM-FTX-SG29-SG31-SG32-SG33-SG3
LIN		21	M	1	- Line item
PIA		22	C	25	- Additional product id
IMD		23	C	99	- Item description
MEA		24	C	5	- Measurements
QTY		25	C	99	- Quantity
ALI		26	C	5	- Additional information
DTM		27	C	35	- Date/time/period
FTX		28	C	99	- Free text
SG29			C	100	- MOA
MOA		29	M	1	- Monetary amount
SG31	*		C	99	- PRI-RNG-CUX-DTM
PRI		30	M	1	- Price details
RNG	+	31	C	1	- Range details
CUX	+	32	C	5	- Currencies
DTM	+	33	C	5	- Date/time/period
SG32			C	9999	- RFF-DTM
RFF		34	M	1	- Reference
DTM		35	C	5	- Date/time/period
SG33	+		C	100	- LOC-QTY-DTM
LOC	+	36	M	1	- Place/location identification
QTY	+	37	C	1	- Quantity
DTM	+	38	C	5	- Date/time/period
SG34			C	10	- TAX
TAX		39	M	1	- Duty/tax/fee details
SG39	*		C	99	- PAC-QTY

2. Message Structure Chart

PAC		40	M	1	- Package
QTY	+	41	C	5	- Quantity
SG46			C	99	- ALC-SG47-SG48-SG49-SG50-SG51
ALC		42	M	1	- Allowance or charge
SG47			C	10	- QTY-RNG
QTY		43	M	1	- Quantity
RNG		44	C	1	- Range details
SG48			C	10	- PCD-RNG
PCD		45	M	1	- Percentage details
RNG		46	C	1	- Range details
SG49			C	10	- MOA-RNG
MOA		47	M	1	- Monetary amount
RNG		48	C	1	- Range details
SG50			C	10	- RTE-RNG
RTE		49	M	1	- Rate details
RNG		50	C	1	- Range details
SG51			C	5	- TAX-MOA
TAX		51	M	1	- Duty/tax/fee details
MOA		52	C	1	- Monetary amount
SG52			C	10	- TDT
TDT		53	M	1	- Details of transport
SG54			C	100	- SCC-SG55
SCC		54	M	1	- Scheduling conditions
SG55			C	10	- QTY-DTM
QTY		55	M	1	- Quantity
DTM		56	C	5	- Date/time/period

Quotation Summary Section

UNS	57	M	1	- Section control
MOA	58	C	15	- Monetary amount
CNT	59	C	10	- Control total
UNT	60	M	1	- Message trailer

3. Branching Diagram

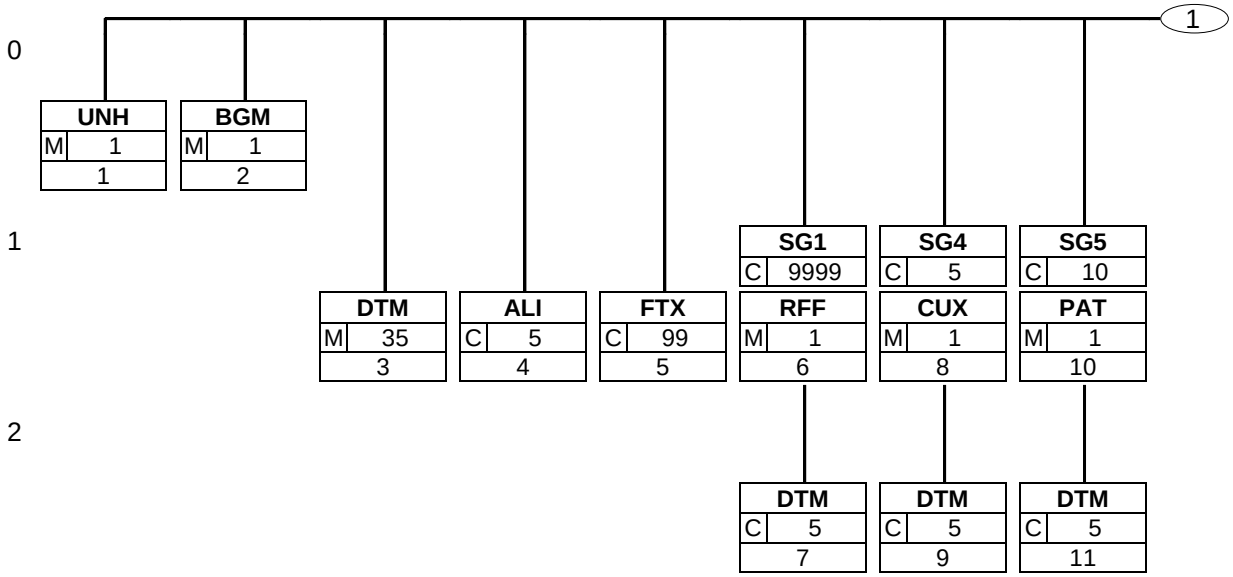

3. Branching Diagram

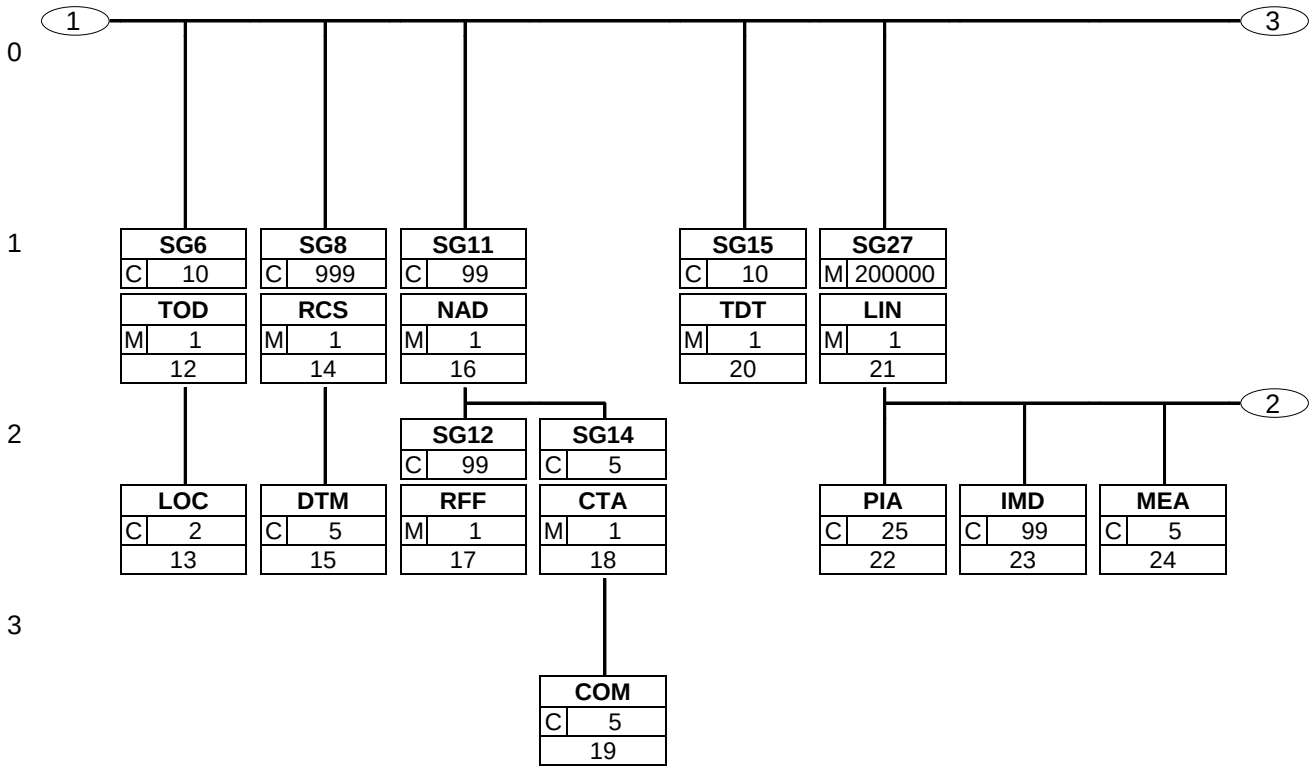

3. Branching Diagram

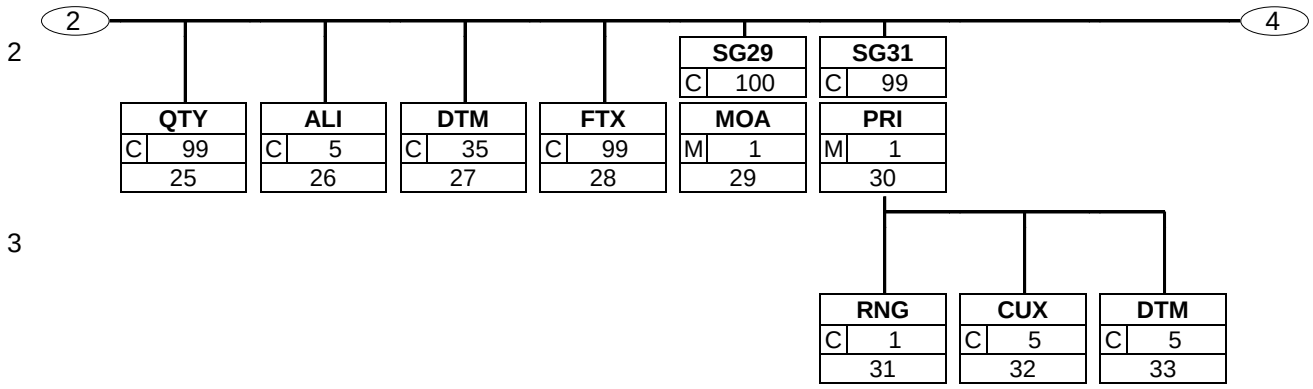

3. Branching Diagram

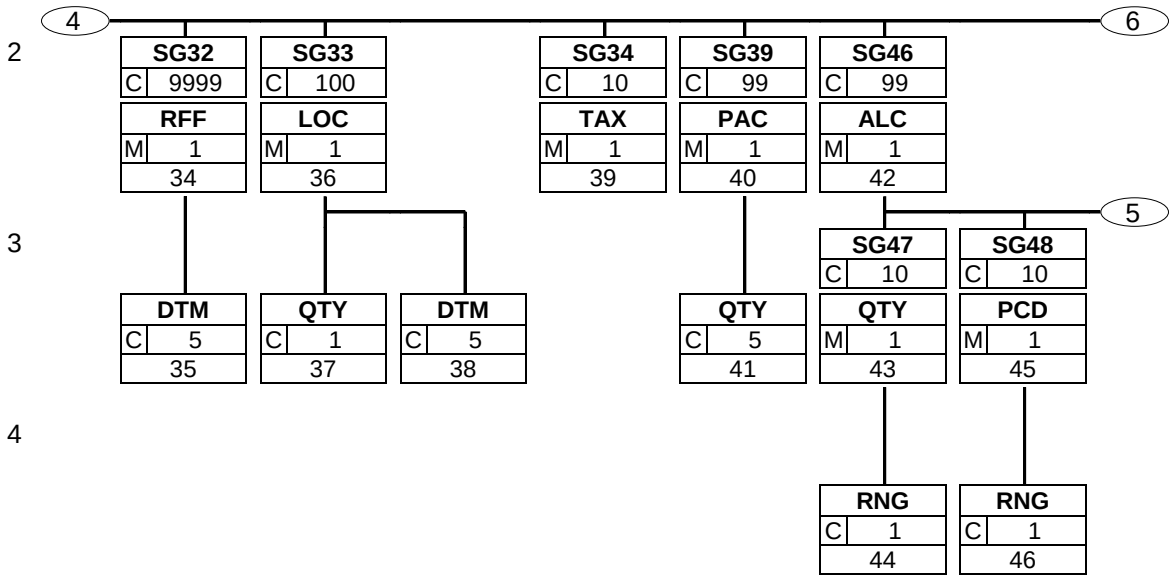

3. Branching Diagram

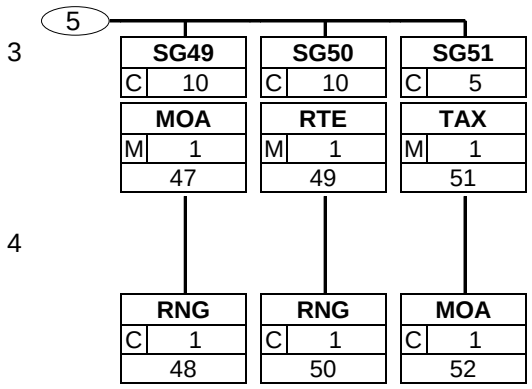

3. Branching Diagram

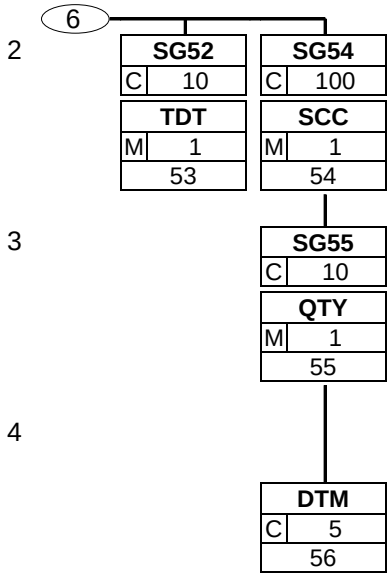

3. Branching Diagram

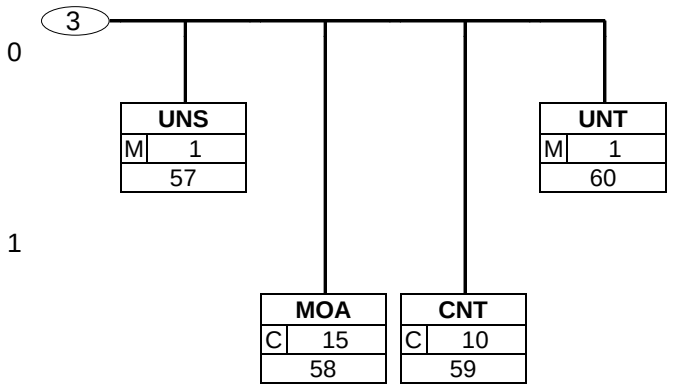

4. Segments Description

Quotation Heading Section

UNH	- M	1	- Message header This segment is used to head, identify and specify a message.
BGM	- M	1	- Beginning of message This segment is used to indicate the type and function of a message and to transmit the identifying number.
DTM	- M	35	- Date/time/period This segment is used to specify any dates related to the complete quotation message.
ALI	- C	5	- Additional information This segment is used to indicate that the products in a message belong to special conditions, e.g. to an end consumer promotion.
FTX	- C	99	- Free text This segment is used to provide any free text information related to the complete quotation message.
SG1	- C	9999	- **RFF-DTM** A group of segments for giving references and where necessary, their dates, relating to the whole message, e.g. contract number, import/export license number, reservation number.
RFF	- M	1	- Reference This segment is used to specify other references which relate to the complete quotation message, for example, contract numbers, price list numbers, etc. The references given at this point are valid for the whole document unless superseded by references at line level when the same qualifier is used.
DTM	- C	5	- Date/time/period This segment is used to specify dates relating to the references given in the preceding RFF segment.
SG4	- C	5	- **CUX-DTM** A group of segments specifying the currencies and related dates/time/period valid for the whole quotation.
CUX	- M	1	- Currencies This segment is used to specify the currencies for international trading.
DTM	- C	5	- Date/time/period This segment is used to specify the date on which a rate of exchange was quoted.
SG5	- C	10	- **PAT-DTM** A group of segments specifying the terms of payment applicable for the whole order.
PAT	- M	1	- Payment terms basis This segment is used to indicate the payment terms which apply to the complete quotation.
DTM	- C	5	- Date/time/period This segment is used to specify any dates associated with the payment terms.
SG6	- C	10	- **TOD-LOC** A group of segments indicating the terms of delivery for the whole order.
TOD	- M	1	- Terms of delivery or transport This segment is used to specify the terms of delivery for the quotation.
LOC	- C	2	- Place/location identification This segment is used to specify the location to which the terms of delivery apply.

4. Segments Description

SG8	- C	999	- **RCS-DTM**
			A group of segments identifying any rules, laws or regulations with which the supplier must comply to meet requirements, e.g. building regulations, safety requirements, etc.
RCS	- M	1	- Requirements and conditions
			This segment is used to indicate purchasing conditions.
DTM	- C	5	- Date/time/period
			This segment is used to specify dates relating to the purchasing conditions indicated in the RCS segment.
SG11	- C	99	- **NAD-SG12-SG14**
			A group of segments identifying the parties with associated information.
NAD	- M	1	- Name and address
			This segment is used to identify the trading partners involved in the quotation process. Identification of the buyer and supplier of goods and services is mandatory in the Quotation using DE's 3035 and C082. Additionally, the delivery party may be specified if different from the buyers address.
SG12	- C	99	- **RFF**
			A group of segments giving references only relevant to the specified party rather than the whole message.
RFF	- M	1	- Reference
			This segment is used to specify references for the party specified in the preceding NAD segment e.g. the Vat Registration Number.
SG14	- C	5	- **CTA-COM**
			A group of segments giving contact details of the specific person or department within the party identified in the NAD segment.
CTA	- M	1	- Contact information
			This segment is used to identify the contact departments or persons within the party specified in the NAD segment.
COM	- C	5	- Communication contact
			This segment identifies the communications number, and type of communications, for the person or department identified in the preceding CTA segment.
SG15	- C	10	- **TDT**
			A group of segments identifying the mode and means of transport relating to the quotation.
TDT	- M	1	- Details of transport
			This segment is used to specify transport details which are applicable to all products contained in the message.

Quotation Detail Section

SG27	- M	200000	- **LIN-PIA-IMD-MEA-QTY-ALI-DTM-FTX-SG29-SG31-SG32-SG33-SG34-SG39-SG46-SG52-SG54**
			A group of segments providing details of the individual requested items. There must be at least one occurrence of Segment group 27 within a quotation. This Segment group may be repeated to give sub-line details.
LIN	- M	1	- Line item
			This segment is used to identify the line item for which a quotation is being made.
PIA	- C	25	- Additional product id
			This segment is used to specify additional or substitutional item identification codes such as a buyer's or seller's item number.

4. Segments Description

IMD	- C	99	- Item description This segment is used to describe the current line item.
MEA	- C	5	- Measurements This segment is used to indicate measurements or limitations of the current line item.
QTY	- C	99	- Quantity This segment is used to indicate quantities related to the current line item.
ALI	- C	5	- Additional information This segment is used to indicate special conditions or the country of origin of the current line item.
DTM	- C	35	- Date/time/period This segment is used to indicate any dates relating to the current line item such as availability dates, manufacturing dates, or lead times.
FTX	- C	99	- Free text This segment is used to provide any free text information related to the current line item.
SG29	- C	100	- **MOA** A group of segments to specify amounts such as cost breakdown information for tooling cost, material or overhead cost.
MOA	- M	1	- Monetary amount This segment is used to indicate net amounts for the currently quoted line item.
SG31	- C	99	- **PRI-RNG-CUX-DTM** A group of segments identifying the relevant pricing information for the goods or services quoted.
PRI	- M	1	- Price details This segment is used to indicate the price information for the current line item.
RNG	- C	1	- Range details This segment is used to indicate ranges to which the price information applies.
CUX	- C	5	- Currencies This segment is used to specify currency information for the price detailed above.
DTM	- C	5	- Date/time/period This segment is used to specify the dates (and possibly times) associated with the price of the currently identified product.
SG32	- C	9999	- **RFF-DTM** A group of segments giving references and where necessary, their dates.
RFF	- M	1	- Reference This segment is used to specify any additional references which are applicable to the current line item only.
DTM	- C	5	- Date/time/period This segment is used to specify dates and times associated with the previous RFF segment.
SG33	- C	100	- **LOC-QTY-DTM** A group of segments specifying destination and quantity details for consignments involving multi-destination deliveries.
LOC	- M	1	- Place/location identification This segment is used to identify the location of delivery for a split delivery order.

4. Segments Description

QTY - C 1 - Quantity

This segment is used to indicate the delivery quantity for the delivery location specified in the previous LOC segment. The total of all quantities specified in segment group 33 for the line, must equal the value for the total quantity detailed in the QTY segment at line level.

DTM - C 5 - Date/time/period

This segment is used to indicate the date, time or period on which the split delivery will take place to the location identified in the LOC segment.

SG34 - C 10 - **TAX**

A group of segments specifying tax related information.

TAX - M 1 - Duty/tax/fee details

This segment is used to indicate the type and rate of tax that is applicable for the current line item.

SG39 - C 99 - **PAC-QTY**

A group of segments identifying the packaging and quantity for goods referenced in the line item.

PAC - M 1 - Package

This segment is used to identify the type of packaging being used for the current line item.

QTY - C 5 - Quantity

This segment is used to specify quantity contained in the pack for the line item being quoted.

SG46 - C 99 - **ALC-SG47-SG48-SG49-SG50-SG51**

A group of segments specifying allowances and charges for an item.

ALC - M 1 - Allowance or charge

This segment is used to indicate whether any allowances or charges applicable to the current line item.

SG47 - C 10 - **QTY-RNG**

A group of segments specifying the quantity of the allowance or charge with its measure unit specifier. A range to which the allowance or charge applies may be specified e.g. An allowance of a free quantity of 20 pieces may be specified if the goods quantity is greater than 1000 pieces.

QTY - M 1 - Quantity

This segment is used to specify quantity allowances or charges for the line item being quoted.

RNG - C 1 - Range details

This segment is used to indicate ranges which must be satisfied before which the quantity allowance or charge becomes effective.

SG48 - C 10 - **PCD-RNG**

A group of segments specifying the percentage for the allowance or charge, e.g. The allowance/charge amount is calculated as 5% of the goods value or a price reduction of 5% may be specified if the goods quantity is within the range 5 tons to 10 tons.

PCD - M 1 - Percentage details

This segment is used to specify percentage allowances or charges for the line item being quoted.

RNG - C 1 - Range details

This segment is used to indicate ranges which must be satisfied before which the percentage allowance or charge becomes effective.

4. Segments Description

SG49 - C 10 - **MOA-RNG**

A group of segments specifying a monetary amount for an allowance or charge. A range to which the allowance or charge applies can be specified, e.g. an allowance of EUR 5000 may be specified if goods value is greater than EUR 100000.

MOA - M 1 - Monetary amount

This segment is used to specify monetary value allowances or charges for the line item being quoted.

RNG - C 1 - Range details

This segment is used to indicate ranges which must be satisfied before which the monetary allowance or charge becomes effective.

SG50 - C 10 - **RTE-RNG**

A group of segments specifying the rate per unit and basis to which the allowance or charge applies, e.g. The allowance/charge amount is 3 EUR per 10 tons.

RTE - M 1 - Rate details

This segment is used to specify rate allowances or charges for the line item being quoted.

RNG - C 1 - Range details

This segment is used to indicate ranges which must be satisfied before which the rate allowance or charge becomes effective.

SG51 - C 5 - **TAX-MOA**

A group of segments specifying tax related information for the allowance or charge.

TAX - M 1 - Duty/tax/fee details

This segment is used to indicate any taxes which may be applicable against the allowances and/or charges information specified in the ALC segment group.

MOA - C 1 - Monetary amount

This segment is used to specify in monetary terms the amount of tax due for the allowances or charges for the current line item.

SG52 - C 10 - **TDT**

A group of segments identifying the mode and means of transport relating to the line item, where this is different to or not specified within the heading section.

TDT - M 1 - Details of transport

This segment is used to specify the means of transport which will be required to deliver the current line item.

SG54 - C 100 - **SCC-SG55**

A group of segments specifying requested delivery schedules relating to quantities, frequencies, and dates, required for the line item, where this is different to or not specified within the heading section.

SCC - M 1 - Scheduling conditions

This segment is used to indicate delivery schedules for the line item being quoted.

SG55 - C 10 - **QTY-DTM**

A group of segments to specify the scheduled quantities, date/time details of the schedule and where required the reference of the schedule.

QTY - M 1 - Quantity

This segment is used to specify the delivery quantity for a delivery schedule.

DTM - C 5 - Date/time/period

This segment is used to indicate dates related to the quantities in the delivery schedule.

Quotation Summary Section

4. Segments Description

UNS - M 1	-	Section control This segment is used to separate the detail and summary sections of the quotation message.
MOA - C 15	-	Monetary amount This segment is used to indicate total monetary amounts applicable to the complete quote, e.g. total value allowances and charges, total taxable amount, etc.
CNT - C 10	-	Control total This segment is used to provide message control totals.
UNT - M 1	-	Message trailer This segment is a mandatory UN/EDIFACT segment. It must always be the last segment in the message.

5. Segments Layout

This section describes each segment used in the EANCOM® Quotation message. The original EDIFACT segment layout is listed. The appropriate comments relevant to the EANCOM® subset are indicated.

Notes:

1. The segments are presented in the sequence in which they appear in the message. The segment or segment group tag is followed by the (M)andatory / (C)onditional indicator, the maximum number of occurrences and the segment description.

2. Reading from left to right, in column one, the data element tags and descriptions are shown, followed by in the second column the EDIFACT status (M or C), the field format, and the picture of the data elements. These first pieces of information constitute the original EDIFACT segment layout.

   Following the EDIFACT information, EANCOM® specific information is provided in the third, fourth, and fifth columns. In the third column a status indicator for the use of (C)onditional EDIFACT data elements (see 2.1 through 2.3 below), in the fourth column the restricted indicator (see point 3 on the following page), and in the fifth column notes and code values used for specific data elements in the message.

2.1 (M)andatory data elements in EDIFACT segments retain their status in EANCOM®.

2.2 Additionally, there are five types of status for data elements with a (C)onditional EDIFACT status, whether for simple, component or composite data elements. These are listed below and can be identified when relevant by the following abbreviations:

- REQUIRED	**R**	Indicates that the entity is required and must be sent.
- ADVISED	**A**	Indicates that the entity is advised or recommended.
- DEPENDENT	**D**	Indicates that the entity must be sent in certain conditions, as defined by the relevant explanatory note.
- OPTIONAL	**O**	Indicates that the entity is optional and may be sent at the discretion of the user.
- NOT USED	**N**	Indicates that the entity is not used and should be omitted.

2.3 If a composite is flagged as **N, NOT USED**, all data elements within that composite will have blank status indicators assigned to them.

3. Status indicators detailed in the fourth column which directly relate to the code values detailed in the fifth **column** may have two values:

- RESTRICTED	*****	A data element marked with an asterisk (*) in the fourth column indicates that the listed codes in column five are the only codes available for use with this data element, in this segment, in this message.
- OPEN		All data elements where coded representation of data is possible and a restricted set of code values is not indicated are open (no asterisk in fourth column). The available codes are listed in the EANCOM® Data Elements and Code Sets Directory. Code values may be given as examples or there may be a note on the format or type of code to be used.

4. Different colours are used for the code values in the segment details: restricted codes are in red and open codes in blue.

5. Segments Layout

Segment number: 1

UNH - M 1 - Message header

Function:

To head, identify and specify a message.

		EDIFACT	GS1	*	Description
0062	Message reference number	M an..14	**M**		Senders unique message reference. Sequence number of the messages in the interchange. DE 0062 in the UNT will be exactly the same. Sender generated.
S009	MESSAGE IDENTIFIER	M	**M**		
0065	Message type	M an..6	**M**	*	QUOTES = Quote message
0052	Message version number	M an..3	**M**	*	D = Draft version/UN/EDIFACT Directory
0054	Message release number	M an..3	**M**	*	01B = Release 2001 - B
0051	Controlling agency	M an..2	**M**	*	UN = UN/CEFACT
0057	Association assigned code	C an..6	**R**	*	EAN004 = GS1 version control number (GS1 Permanent Code) Indicates that the message is the EANCOM version 004 of the UNSM Quotation.
0068	Common access reference	C an..35	**N**		
S010	STATUS OF THE TRANSFER	C	**N**		
0070	Sequence of transfers	M n..2			
0073	First and last transfer	C a1			

Segment Notes:

This segment is used to head, identify and specify a message.
DE's 0065, 0052, 0054, and 0051: Indicate that the message is a UNSM Quotation message based on the D.01B directory under the control of the United Nations.

Example:
UNH+ME000001+QUOTES:D:01B:UN:EAN004'

5. Segments Layout

Segment number: 2

BGM - M 1 - Beginning of message					
Function: To indicate the type and function of a message and to transmit the identifying number.					
		EDIFACT	GS1	*	Description
C002	DOCUMENT/MESSAGE NAME	C	**R**		
1001	Document name code	C an..3	**R**	*	310 = Offer/quotation
1131	Code list identification code	C an..17	**N**		
3055	Code list responsible agency code	C an..3	**N**		
1000	Document name	C an..35	**O**		
C106	DOCUMENT/MESSAGE IDENTIFICATION	C	**R**		
1004	Document identifier	C an..35	**R**		Quote number assigned by document sender. For global unique identification of documents Global Document Type Identifier (GDTI) is available.
1056	Version identifier	C an..9	**N**		
1060	Revision identifier	C an..6	**N**		
1225	Message function code	C an..3	**R**	*	7 = Duplicate 9 = Original 31 = Copy 42 = Confirmation via specific means The message function, coded is a critical data element in this segment. It applies to all data indicated in the message. The following definitions apply for the restricted codes: 7 = Duplicate - A re-transmission involving the same parties, on the specific request of the receiver. 9 = Original - An original transmission of a quotation. 31 = Copy - A copy of a quotation for a third party for information purposes. 42 = Confirmation via specific means - A confirmation of a previous quotation sent by means other than EDI, e.g., fax.
4343	Response type code	C an..3	**D**	*	AC = Acknowledge - with detail and change AI = Acknowledge only changes NA = No acknowledgement needed This DE is used if the Quotation issuer wishes to explicitly indicate whether an acknowledgement is required or not.
Segment Notes: This segment is used to indicate the type and function of a message and to transmit the identifying number. All other references other than the document number DE 1004 are in the RFF segment. Example: BGM+310+QT8709+7'					

5. Segments Layout

Segment number: 3

DTM - M 35 - Date/time/period					
Function: To specify date, and/or time, or period.					
		EDIFACT	GS1	*	Description
C507	DATE/TIME/PERIOD	M	**M**		
2005	Date or time or period function code qualifier	M an..3	**M**	*	2 = Delivery date/time, requested 36 = Expiry date 61 = Cancel if not delivered by this date 63 = Delivery date/time, latest 64 = Delivery date/time, earliest 69 = Delivery date/time, promised for 137 = Document/message date/time 169 = Lead time 273 = Validity period
2380	Date or time or period value	C an..35	**R**		
2379	Date or time or period format code	C an..3	**R**		102 = CCYYMMDD

Segment Notes:

This segment is used to specify any dates related to the complete quotation message.
DE 2005: Identification of the 'Document/message date/time' (code value 137) is mandatory in an EANCOM message.

Example:
DTM+137:20020101:102'

5. Segments Layout

Segment number: 4

ALI	- C	5 - Additional information			
Function: To indicate that special conditions due to the origin, customs preference, fiscal or commercial factors are applicable.					
		EDIFACT	GS1	*	Description
3239	Country of origin name code	C an..3	**N**		
9213	Duty regime type code	C an..3	**N**		
4183	Special condition code	C an..3	**O**		X5 = End consumer promotional item (GS1 Temporary Code)
4183	Special condition code	C an..3	**O**		
4183	Special condition code	C an..3	**O**		
4183	Special condition code	C an..3	**O**		
4183	Special condition code	C an..3	**N**		

Segment Notes:

This segment is used to indicate that the products in a message belong to special conditions, e.g. to an end consumer promotion.

Example:
ALI+++X5'

5. Segments Layout

Segment number: 5

FTX	- C	99 - Free text			
Function: To provide free form or coded text information.					
		EDIFACT	GS1	*	Description
4451	Text subject code qualifier	M an..3	**M**		PUR = Purchasing information QUT = Quotation instruction/information ZZZ = Mutually defined
4453	Free text function code	C an..3	**O**	*	1 = Text for subsequent use
C107	TEXT REFERENCE	C	**D**		Reference to a standard text. This composite is only used when trading partners have agreed to use mutually defined code values.
4441	Free text value code	M an..17	**M**		001 = ... standard text ....
1131	Code list identification code	C an..17	**O**		
3055	Code list responsible agency code	C an..3	**D**		91 = Assigned by supplier or supplier's agent 92 = Assigned by buyer or buyer's agent
C108	TEXT LITERAL	C	**D**		This composite is only used if coded text can not be used.
4440	Free text value	M an..512	**M**		
4440	Free text value	C an..512	**O**		
4440	Free text value	C an..512	**O**		
4440	Free text value	C an..512	**O**		
4440	Free text value	C an..512	**O**		
3453	Language name code	C an..3	**D**		ISO 639 two alpha code This data element is only used when non coded free text has been provided in data element C108.
4447	Free text format code	C an..3	**N**		

Segment Notes:

This segment is used to provide any free text information related to the complete quotation message.
Use of this segment in free form is not recommended since it inhibits automatic processing of the Quotation.
Coded references to standard texts is an available functionality which enables automatic processing and reduces transmission overheads. Standard texts should be mutually defined among trading partners and can be used to cover legal and other requirements.

Example:
FTX+ZZZ+1+001::91'
Standard text 001 = 'This quotation is valid for 20 days following date of message'

5. Segments Layout

Segment number: 6

SG1	- C	9999	-	RFF-DTM
RFF	- M	1	-	Reference

Function:

To specify a reference.

		EDIFACT	GS1	*	Description
C506	REFERENCE	M	**M**		
1153	Reference code qualifier	M an..3	**M**		AHU = Request for quote number CR = Customer reference number CT = Contract number PL = Price list number PR = Price quote number
1154	Reference identifier	C an..70	**R**		
1156	Document line identifier	C an..6	**N**		
4000	Reference version identifier	C an..35	**N**		
1060	Revision identifier	C an..6	**N**		

Segment Notes:

This segment is used to specify other references which relate to the complete quotation message, for example, contract numbers, price list numbers, etc. The references given at this point are valid for the whole document unless superseded by references at line level when the same qualifier is used.

Example:
RFF+CT:439776'
RFF+PL:JAN199456'

5. Segments Layout

Segment number: 7

SG1	- C	9999	-	RFF-DTM
DTM	- C	5	-	Date/time/period

Function:

To specify date, and/or time, or period.

		EDIFACT	GS1	*	Description
C507	DATE/TIME/PERIOD	M	**M**		
2005	Date or time or period function code qualifier	M an..3	**M**	*	171 = Reference date/time
2380	Date or time or period value	C an..35	**R**		
2379	Date or time or period format code	C an..3	**R**		102 = CCYYMMDD 718 = CCYYMMDD-CCYYMMDD

Segment Notes:

This segment is used to specify dates relating to the references given in the preceding RFF segment.

Example:
DTM+171:20020101:102'

5. Segments Layout

Segment number: 8

SG4	- C	5 -	CUX-DTM
CUX	- M	1 -	Currencies

Function:

To specify currencies used in the transaction and relevant details for the rate of exchange.

		EDIFACT	GS1	*	Description
C504	CURRENCY DETAILS	C	**R**		
6347	Currency usage code qualifier	M an..3	**M**	*	2 = Reference currency
6345	Currency identification code	C an..3	**R**		ISO 4217 three alpha
6343	Currency type code qualifier	C an..3	**R**	*	12 = Quotation currency
6348	Currency rate value	C n..4	**N**		
C504	CURRENCY DETAILS	C	**D**		The second occurrence of this composite is only used if a target currency is being specified.
6347	Currency usage code qualifier	M an..3	**M**	*	3 = Target currency
6345	Currency identification code	C an..3	**R**		ISO 4217 three alpha
6343	Currency type code qualifier	C an..3	**R**	*	4 = Invoicing currency 9 = Order currency 10 = Pricing currency 11 = Payment currency
6348	Currency rate value	C n..4	**N**		
5402	Currency exchange rate	C n..12	**D**		The rate of exchange is only used if a target currency has been identified in the second occurrence of C504.
6341	Exchange rate currency market identifier	C an..3	**N**		

Segment Notes:

This segment is used to specify the currencies for international trading.
The CUX segment is mandatory for international exchanges.
When specifying Reference and Target Currencies for international trade, one occurrence of CUX is all that is required. The reference currency is identified in the first occurrence of composite C504, with the target currency specified in the second occurrence of C504. The rate of exchange between the two is specified in DE 5402.
The general rule for calculating the rate of exchange is as follows :
Reference Currency multiplied by Rate = Target Currency

Example:
CUX+2:EUR:12'
CUX+2:EUR:12+3:USD:11+0.90243'

5. Segments Layout

Segment number: 9

SG4	- C	5 -	CUX-DTM
DTM	- C	5 -	Date/time/period

Function:

To specify date, and/or time, or period.

		EDIFACT	GS1	*	Description
C507	DATE/TIME/PERIOD	M	**M**		
2005	Date or time or period function code qualifier	M an..3	**M**	*	134 = Rate of exchange date/time
2380	Date or time or period value	C an..35	**R**		
2379	Date or time or period format code	C an..3	**R**		102 = CCYYMMDD 718 = CCYYMMDD-CCYYMMDD

Segment Notes:

This segment is used to specify the date on which a rate of exchange was quoted.

Example:
DTM+134:20020101:102'

5. Segments Layout

Segment number: 10

SG5	- C	10 -	PAT-DTM
PAT	- M	1 -	Payment terms basis

Function:

To specify the payment terms basis.

Notes:
1. This segment will be removed effective with directory D.02B.

		EDIFACT	GS1	*	Description
4279	Payment terms type code qualifier	M an..3	**M**		1 = Basic 3 = Fixed date 7 = Extended 20 = Penalty terms 22 = Discount
C110	PAYMENT TERMS	C	**N**		
4277	Payment terms description identifier	M an..17			
1131	Code list identification code	C an..17			
3055	Code list responsible agency code	C an..3			
4276	Payment terms description	C an..35			
4276	Payment terms description	C an..35			
C112	TERMS/TIME INFORMATION	C	**O**		
2475	Time reference code	M an..3	**M**		5 = Date of invoice
2009	Terms time relation code	C an..3	**O**		3 = After reference
2151	Period type code	C an..3	**O**		D = Day M = Month WD = Working days Y = Year
2152	Period count quantity	C n..3	**O**		

Segment Notes:

This segment is used to indicate the payment terms which apply to the complete quotation.

Example:
PAT+1++5:3:D:30'
This example indicates basic payment terms of payment due 30 days after the reference date which is the invoice date.

5. Segments Layout

Segment number: 11

SG5	- C	10 -	PAT-DTM
DTM	- C	5 -	Date/time/period

Function:

To specify date, and/or time, or period.

		EDIFACT	GS1	*	Description
C507	DATE/TIME/PERIOD	M	**M**		
2005	Date or time or period function code qualifier	M an..3	**M**		12 = Terms discount due date/time 13 = Terms net due date
2380	Date or time or period value	C an..35	**R**		
2379	Date or time or period format code	C an..3	**R**		102 = CCYYMMDD 718 = CCYYMMDD-CCYYMMDD

Segment Notes:

This segment is used to specify any dates associated with the payment terms.

Example:
DTM+13:20020124:102'
Net due date for payment the 24th January 2002.

5. Segments Layout

Segment number: 12

SG6	- C	10 -	TOD-LOC
TOD	- M	1 -	Terms of delivery or transport

Function:

To specify terms of delivery or transport.

		EDIFACT	GS1	*	Description
4055	Delivery or transport terms function code	C an..3	**R**		3 = Price and despatch condition 6 = Delivery condition
4215	Transport charges payment method code	C an..3	**O**		
C100	TERMS OF DELIVERY OR TRANSPORT	C	**R**		
4053	Delivery or transport terms description code	C an..3	**R**		INCOTERMS (See EANCOM Codes Set) If INCOTERMS are applicable, then DE 3055 has to contain code value "9" and DE 1131 must be used.
1131	Code list identification code	C an..17	**D**		
3055	Code list responsible agency code	C an..3	**D**		
4052	Delivery or transport terms description	C an..70	**O**		
4052	Delivery or transport terms description	C an..70	**O**		

Segment Notes:

This segment is used to specify the terms of delivery for the quotation.

Example:
TOD+3++CIF:2E:9'

Dependency Notes:
Data elements 1131 and 3055 are only used if specific terms of delivery codes, which are outside the INCOTERMS, are being used.

5. Segments Layout

Segment number: 13

SG6	- C	10 -	TOD-LOC
LOC	- C	2 -	Place/location identification

Function:

To identify a place or a location and/or related locations.

		EDIFACT	GS1	*	Description
3227	Location function code qualifier	M an..3	**M**		1 = Place of terms of delivery
C517	LOCATION IDENTIFICATION	C	**R**		
3225	Location name code	C an..25	**A**		UN/LOCODE
1131	Code list identification code	C an..17	**O**		
3055	Code list responsible agency code	C an..3	**D**		3 = IATA (International Air Transport Association) DE 3055 must be used if DE 3225 is used and does not contain an UN/LOCODE.
3224	Location name	C an..256	**O**		
C519	RELATED LOCATION ONE IDENTIFICATION	C	**N**		
3223	First related location name code	C an..25			
1131	Code list identification code	C an..17			
3055	Code list responsible agency code	C an..3			
3222	First related location name	C an..70			
C553	RELATED LOCATION TWO IDENTIFICATION	C	**N**		
3233	Second related location name code	C an..25			
1131	Code list identification code	C an..17			
3055	Code list responsible agency code	C an..3			
3232	Second related location name	C an..70			
5479	Relation code	C an..3	**N**		

Segment Notes:

This segment is used to specify the location to which the terms of delivery apply.

Example:
LOC+1+BE-BRU'

5. Segments Layout

Segment number: 14

SG8	- C	999	-	RCS-DTM
RCS	- M	1	-	Requirements and conditions

Function:

To specify sector/subject requirements and conditions.

		EDIFACT	GS1	*	Description
7293	Sector area identification code qualifier	M an..3	**M**	*	26 = Purchasing conditions
C550	REQUIREMENT/CONDITION IDENTIFICATION	C	**N**		
7295	Requirement or condition description identifier	M an..17			
1131	Code list identification code	C an..17			
3055	Code list responsible agency code	C an..3			
7294	Requirement or condition description	C an..35			
1229	Action request/notification description code	C an..3	**N**		
3207	Country name code	C an..3	**N**		

Segment Notes:

This segment is used to indicate purchasing conditions.

Example:
RCS+26'

5. Segments Layout

Segment number: 15

SG8	- C	999	-	RCS-DTM
DTM	- C	5	-	Date/time/period

Function:

To specify date, and/or time, or period.

		EDIFACT	GS1	*	Description
C507	DATE/TIME/PERIOD	M	**M**		
2005	Date or time or period function code qualifier	M an..3	**M**	*	69 = Delivery date/time, promised for 424 = Last date of ordering
2380	Date or time or period value	C an..35	**R**		
2379	Date or time or period format code	C an..3	**R**		

Segment Notes:

This segment is used to specify dates relating to the purchasing conditions indicated in the RCS segment.

Example:
DTM+69:20020101:102'

5. Segments Layout

Segment number: 16

SG11	- C	99	-	NAD-SG12-SG14
NAD	- M	1	-	Name and address

Function:

To specify the name/address and their related function, either by C082 only and/or unstructured by C058 or structured by C080 thru 3207.

		EDIFACT	GS1	*	Description
3035	Party function code qualifier	M an..3	**M**		BY = Buyer DP = Delivery party SR = Supplier's agent/representative SU = Supplier
C082	PARTY IDENTIFICATION DETAILS	C	**A**		
3039	Party identifier	M an..35	**M**		GLN - Format n13
1131	Code list identification code	C an..17	**N**		
3055	Code list responsible agency code	C an..3	**R**	*	9 = GS1
C058	NAME AND ADDRESS	C	**O**		This composite may only be used to fulfill the requirements of directive 2003/58/EC, article 4.
3124	Name and address description	M an..35	**M**		
3124	Name and address description	C an..35	**O**		
3124	Name and address description	C an..35	**O**		
3124	Name and address description	C an..35	**O**		
3124	Name and address description	C an..35	**O**		
C080	PARTY NAME	C	**D**		
3036	Party name	M an..35	**M**		Party Name in clear text.
3036	Party name	C an..35	**O**		
3036	Party name	C an..35	**O**		
3036	Party name	C an..35	**O**		
3036	Party name	C an..35	**O**		
3045	Party name format code	C an..3	**O**		
C059	STREET	C	**D**		
3042	Street and number or post office box identifier	M an..35	**M**		Building Name/Number and Street
3042	Street and number or post office box identifier	C an..35	**O**		Name and/or P.O. Box.
3042	Street and number or post office box identifier	C an..35	**O**		
3042	Street and number or post office box identifier	C an..35	**O**		
3164	City name	C an..35	**D**		City/Town name, clear text
C819	COUNTRY SUB-ENTITY DETAILS	C	**D**		
3229	Country sub-entity name code	C an..9	**O**		
1131	Code list identification code	C an..17	**O**		
3055	Code list responsible agency	C an..3	**O**		

5. Segments Layout

Segment number: 16

		EDIFACT	GS1	*	Description
	code				
3228	Country sub-entity name	C an..70	**O**		County/State, clear text.
3251	Postal identification code	C an..17	**D**		Postal Code
3207	Country name code	C an..3	**D**		ISO 3166 two alpha code

Segment Notes:

This segment is used to identify the trading partners involved in the quotation process. Identification of the buyer and supplier of goods and services is mandatory in the Quotation using DE's 3035 and C082. Additionally, the delivery party may be specified if different from the buyers address.

Example:
NAD+BY+5412345000013::9'
NAD+SU+4012345500004::9'
NAD+DP+5412345000020::9'

Dependency Notes:
The following composites and data elements are only used when a coded name and address can not be used.
The affected composites and data elements are as follows:
C080 - C059 - 3164 - C819 - 3251 - 3207

5. Segments Layout

Segment number: 17

SG11	- C	99	-	NAD-SG12-SG14
SG12	- C	99	-	RFF
RFF	- M	1	-	Reference

Function:

To specify a reference.

		EDIFACT	GS1	*	Description
C506	REFERENCE	M	**M**		
1153	Reference code qualifier	M an..3	**M**	*	YC1 = Additional party identification (GS1 Temporary Code) FC = Fiscal number GN = Government reference number VA = VAT registration number
1154	Reference identifier	C an..70	**R**		
1156	Document line identifier	C an..6	**N**		
4000	Reference version identifier	C an..35	**N**		
1060	Revision identifier	C an..6	**N**		

Segment Notes:

This segment is used to specify references for the party specified in the preceding NAD segment e.g. the Vat Registration Number.

Example:
RFF+VA:83564151'

5. Segments Layout

Segment number: 18

SG11	- C	99 -	NAD-SG12-SG14
SG14	- C	5 -	CTA-COM
CTA	- M	1 -	Contact information

Function:

To identify a person or a department to whom communication should be directed.

		EDIFACT	GS1	*	Description
3139	Contact function code	C an..3	**R**		IC = Information contact OC = Order contact PD = Purchasing contact SR = Sales representative or department
C056	DEPARTMENT OR EMPLOYEE DETAILS	C	**O**		
3413	Department or employee name code	C an..17	**O**		
3412	Department or employee name	C an..35	**O**		

Segment Notes:

This segment is used to identify the contact departments or persons within the party specified in the NAD segment.

Example:
CTA+OC+:N SCHULTE'

5. Segments Layout

Segment number: 19

SG11	- C	99 -	NAD-SG12-SG14
SG14	- C	5 -	CTA-COM
COM	- C	5 -	Communication contact

Function:

To identify a communication number of a department or a person to whom communication should be directed.

		EDIFACT	GS1	*	Description
C076	COMMUNICATION CONTACT	M	**M**		
3148	Communication address identifier	M an..512	**M**		
3155	Communication address code qualifier	M an..3	**M**		EM = Electronic mail TE = Telephone AO = Uniform Resource Location (URL)

Segment Notes:

This segment identifies the communications number, and type of communications, for the person or department identified in the preceding CTA segment.

Example:
COM+0033154768212:FX'

5. Segments Layout

Segment number: 20

SG15	- C	10 -	TDT
TDT	- M	1 -	Details of transport

Function:

To specify the transport details such as mode of transport, means of transport, its conveyance reference number and the identification of the means of transport.

		EDIFACT	GS1	*	Description
8051	Transport stage code qualifier	M an..3	**M**		20 = Main-carriage transport
8028	Means of transport journey identifier	C an..17	**O**		Reference number covering the transport.
C220	MODE OF TRANSPORT	C	**A**		
8067	Transport mode name code	C an..3	**R**		10 = 20 = 30 = 40 =
8066	Transport mode name	C an..17	**N**		
C228	TRANSPORT MEANS	C	**D**		Data Elements 8179 and 8178 are only used when the type of transport must be specifically identified, that is, when a generic description such as road transport is unsuitable.
8179	Transport means description code	C an..8	**O**		23 = Rail bulk car 31 = Truck 32 = Road tanker
8178	Transport means description	C an..17	**O**		
C040	CARRIER	C	**O**		
3127	Carrier identifier	C an..17	**A**		GLN - Format n13
1131	Code list identification code	C an..17	**O**		
3055	Code list responsible agency code	C an..3	**D**		9 = GS1
3128	Carrier name	C an..35	**O**		
8101	Transit direction indicator code	C an..3	**O**		BS = Buyer to supplier SB = Supplier to buyer
C401	EXCESS TRANSPORTATION INFORMATION	C	**N**		
8457	Excess transportation reason code	M an..3			
8459	Excess transportation responsibility code	M an..3			
7130	Customer shipment authorisation identifier	C an..17			
C222	TRANSPORT IDENTIFICATION	C	**O**		
8213	Transport means identification name identifier	C an..9	**O**		
1131	Code list identification code	C an..17	**O**		
3055	Code list responsible agency code	C an..3	**D**		DE 3055 must be used if DE 8213 is used.
8212	Transport means identification	C an..35	**O**		

5. Segments Layout

Segment number: 20

		EDIFACT	GS1	*	Description
	name				
8453	Transport means nationality code	C an..3	**O**		
8281	Transport means ownership indicator code	C an..3	**O**		

Segment Notes:

This segment is used to specify transport details which are applicable to all products contained in the message.

Example:
TDT+20++30+31'

5. Segments Layout

Segment number: 21

SG27	- M	200000 -	LIN-PIA-IMD-MEA-QTY-ALI-DTM-FTX-SG29-SG31-SG32-SG33-SG34-SG39-SG46-SG52-SG54
LIN	- M	1 -	Line item

Function:

To identify a line item and configuration.

		EDIFACT	GS1	*	Description
1082	Line item identifier	C an..6	**R**		Application generated number of the count of the lines in the quotation.
1229	Action request/notification description code	C an..3	**D**	*	4 = No action 5 = Accepted without amendment 7 = Not accepted 10 = Not found 23 = Proposed amendment This data element is only used when the message is used to respond to a request for quote. 4 = No action: use when the item requires investigation before a response can be sent 5 = Accepted without amendment: use when item is quoted as requested 7 = Not accepted: use when unable to provide a quotation for the requested item 10 = Not found: use when the requested item can not be traced 23 = Proposed amendment: use when the item is quoted with some amendment, including substitution of an alternative item This data element is only used when the message is used to respond to a request for quote.
C212	ITEM NUMBER IDENTIFICATION	C	**D**		This composite is only used for the identification of GS1 codes. If another coding structure is required, e. g. HIBC, this composite will not be used and the code will be detailed in the PIA segment.
7140	Item identifier	C an..35	**R**		Format n..14 GTIN, this is the number of the article being quoted.
7143	Item type identification code	C an..3	**R**	*	SRV = GS1 Global Trade Item Number
1131	Code list identification code	C an..17	**N**		
3055	Code list responsible agency code	C an..3	**N**		
C829	SUB-LINE INFORMATION	C	**D**		
5495	Sub-line indicator code	C an..3	**R**	*	1 = Sub-line information
1082	Line item identifier	C an..6	**R**		
1222	Configuration level number	C n..2	**N**		
7083	Configuration operation code	C an..3	**N**		

Segment Notes:

This segment is used to identify the line item for which a quotation is being made.
If Global Trade Item Numbers are available it is mandatory to use GTIN within the LIN segment.
The detail section of the Quotation message is formed by a repeating group of segments always starting with the LIN segment.

Example:
LIN+1++5412345111115:SRV'

5. Segments Layout

Segment number: 21

Dependency Notes:
C829 is only used when sub-lines are required.
FOR A COMPLETE DESCRIPTION ON THE USAGE OF SUB-LINES PLEASE REFER TO PART I, SECTION 4.10.

5. Segments Layout

Segment number: 22

SG27	- M	200000	-	LIN-PIA-IMD-MEA-QTY-ALI-DTM-FTX-SG29-SG31-SG32-SG33-SG34-SG39-SG46-SG52-SG54
PIA	- C	25	-	Additional product id

Function:

To specify additional or substitutional item identification codes.

		EDIFACT	GS1	*	Description
4347	Product identifier code qualifier	M an..3	**M**	*	1 = Additional identification 2 = Identification for potential substitution 4 = Substituted for 5 = Product identification Product Id function has the following restricted coded functions: 1 - Additional Identification - To provide an additional identity for the product identified in the LIN segment. The additional identification can consist of: A supplemental identification which provides more information complementary to the main GTIN provided in the LIN segment, e.g., a batch number, promotional variant number, product group number, etc,. An alternative identification which may be used instead of the main GTIN provided in the LIN segment, e.g., a buyers article number, an HIBC code, etc,. 2 = Identification for potential substitution - To provide the GTIN of a product which can substitute the product identified by the GTIN provided in the LIN segment when the latter is temporarily unavailable, e.g., a similar or identical product coded with a different GS1 number (article coded in a different country), a different size unit of the same product, a similar product with for example a different brand name. 4 - Substituted for - To provide the GTIN of a product which has been substituted for the product identified by the GTIN provided in the LIN segment. In the Quotation message this function code may be used to inform trading partners of a number change relevant to a product. In this case, the LIN segment will contain the new GTIN and the 'Substituted for' PIA segment will identify the old GTIN which has been substituted. 5 - Product Identification - To provide the primary product identification code when no GTIN has been provided in the LIN segment.
C212	ITEM NUMBER IDENTIFICATION	M	**M**		
7140	Item identifier	C an..35	**R**		
7143	Item type identification code	C an..3	**R**		AC = HIBC (Health Industry Bar Code) IB = ISBN (International Standard Book Number) IN = Buyer's item number SA = Supplier's article number SRV = GS1 Global Trade Item Number
1131	Code list identification code	C an..17	**O**		

5. Segments Layout

Segment number: 22

		EDIFACT	GS1	*	Description
3055	Code list responsible agency code	C an..3	**D**		9 = GS1 91 = Assigned by supplier or supplier's agent 92 = Assigned by buyer or buyer's agent
C212	ITEM NUMBER IDENTIFICATION	C	**O**		
7140	Item identifier	C an..35	**R**		
7143	Item type identification code	C an..3	**R**		
1131	Code list identification code	C an..17	**O**		
3055	Code list responsible agency code	C an..3	**D**		
C212	ITEM NUMBER IDENTIFICATION	C	**O**		
7140	Item identifier	C an..35	**R**		
7143	Item type identification code	C an..3	**R**		
1131	Code list identification code	C an..17	**O**		
3055	Code list responsible agency code	C an..3	**D**		
C212	ITEM NUMBER IDENTIFICATION	C	**O**		
7140	Item identifier	C an..35	**R**		
7143	Item type identification code	C an..3	**R**		
1131	Code list identification code	C an..17	**O**		
3055	Code list responsible agency code	C an..3	**D**		
C212	ITEM NUMBER IDENTIFICATION	C	**O**		
7140	Item identifier	C an..35	**R**		
7143	Item type identification code	C an..3	**R**		
1131	Code list identification code	C an..17	**O**		
3055	Code list responsible agency code	C an..3	**D**		

5. Segments Layout

Segment Notes:

This segment is used to specify additional or substitutional item identification codes such as a buyer's or seller's item number.

Examples:
PIA+1+AB7456:IN'
In this example the PIA segment is used to provide an additional identification to the GTIN provided in the LIN segment. The GTIN 5412345111115 provided in the LIN segment refers to the internal buyer's item number AB7456.

PIA+2+4000862141662:SRV'
In this example the PIA segment is used to provide a GTIN for substitution. The product identified in the LIN segment by the GTIN 5412345111115 can be substituted by the product identified in the PIA segment by the GTIN 4000862141662 in case the former is not available.

PIA+4+5410738251028:SRV'
In this example the 'Substituted For' PIA segment is used to provide the GTIN of the product which is being

5. Segments Layout

Segment number: 22

substituted for the former primary GTIN. The new code 5412345111184 would be included in the message in the 'Product Identification' PIA segment.

PIA+5+2209953C001L:AC'
This example details the HIBC code 2209953C001L which is provided as the primary product code because no GTIN was provided in the LIN segment.

5. Segments Layout

Segment number: 23

SG27	- M	200000 -	LIN-PIA-IMD-MEA-QTY-ALI-DTM-FTX-SG29-SG31-SG32-SG33-SG34-SG39-SG46-SG52-SG54
IMD	- C	99 -	Item description

Function:

To describe an item in either an industry or free format.

		EDIFACT	GS1	*	Description
7077	Description format code	C an..3	**O**	*	C = Code (from industry code list) F = Free-form S = Structured (from industry code list) B = Code and text
C272	ITEM CHARACTERISTIC	C	**O**		
7081	Item characteristic code	C an..3	**R**		
1131	Code list identification code	C an..17	**O**		
3055	Code list responsible agency code	C an..3	**D**	*	9 = GS1 Must be used if DE7081 contains an GS1 Code.
C273	ITEM DESCRIPTION	C	**A**		
7009	Item description code	C an..17	**O**		CU = Consumer unit (GS1 Permanent Code) DU = Despatch unit (GS1 Permanent Code) TU = Traded unit (GS1 Permanent Code) VQ = Variable quantity product (GS1 Permanent Code)
1131	Code list identification code	C an..17	**O**		
3055	Code list responsible agency code	C an..3	**D**		9 = GS1 91 = Assigned by supplier or supplier's agent 92 = Assigned by buyer or buyer's agent
7008	Item description	C an..256	**O**		
7008	Item description	C an..256	**O**		
3453	Language name code	C an..3	**O**		
7383	Surface or layer code	C an..3	**N**		

Segment Notes:

This segment is used to describe the current line item.
It is recommended that this segment only be used for coded descriptions. Data element 7008 in clear text should only be used when no product code is available.
If you wish to indicate that promotional details are marked on the package, then this should be indicated in DE 7233 in the PAC segment.

Example:
IMD+C++TU::9'

5. Segments Layout

Segment number: 24

SG27	- M	200000 -	LIN-PIA-IMD-MEA-QTY-ALI-DTM-FTX-SG29-SG31-SG32-SG33-SG34-SG39-SG46-SG52-SG54
MEA	- C	5 -	Measurements

Function:

To specify physical measurements, including dimension tolerances, weights and counts.

		EDIFACT	GS1	*	Description
6311	Measurement purpose code qualifier	M an..3	**M**		PD = Physical dimensions (product ordered) SO = Storage limitation TL = Transportation equipment limitations
C502	MEASUREMENT DETAILS	C	**A**		
6313	Measured attribute code	C an..3	**A**		AAA = Unit net weight HT = Height dimension LN = Length dimension WD = Width dimension
6321	Measurement significance code	C an..3	**O**		3 = Approximately 4 = Equal to
6155	Non-discrete measurement name code	C an..17	**N**		
6154	Non-discrete measurement name	C an..70	**N**		
C174	VALUE/RANGE	C	**R**		
6411	Measurement unit code	M an..3	**M**		CEL = degree celsius KGM = kilogram MMT = millimetre
6314	Measurement value	C an..18	**O**		
6162	Range minimum value	C n..18	**O**		
6152	Range maximum value	C n..18	**O**		
6432	Significant digits quantity	C n..2	**O**		
7383	Surface or layer code	C an..3	**N**		

Segment Notes:

This segment is used to indicate measurements or limitations of the current line item.

Example:
MEA+PD+HT+MMT:500'
MEA+PD+LN+MMT:200'
MEA+PD+WD+MMT:100'
Product with dimensions 500mm x 200mm x 100mm

5. Segments Layout

Segment number: 25

SG27	- M	200000	-	LIN-PIA-IMD-MEA-QTY-ALI-DTM-FTX-SG29-SG31-SG32-SG33-SG34-SG39-SG46-SG52-SG54
QTY	- C	99	-	Quantity

Function:

To specify a pertinent quantity.

		EDIFACT	GS1	*	Description
C186	QUANTITY DETAILS	M	**M**		
6063	Quantity type code qualifier	M an..3	**M**		1 = Discrete quantity 52 = Quantity per pack 53 = Minimum order quantity 54 = Maximum order quantity
6060	Quantity	M an..35	**M**		
6411	Measurement unit code	C an..3	**D**		KGM = kilogram This DE is only used if the quoted product is a variable weight product.

Segment Notes:

This segment is used to indicate quantities related to the current line item.

Example:
QTY+53:50'

5. Segments Layout

Segment number: 26

SG27	- M	200000	-	LIN-PIA-IMD-MEA-QTY-ALI-DTM-FTX-SG29-SG31-SG32-SG33-SG34-SG39-SG46-SG52-SG54
ALI	- C	5	-	Additional information

Function:

To indicate that special conditions due to the origin, customs preference, fiscal or commercial factors are applicable.

		EDIFACT	GS1	*	Description
3239	Country of origin name code	C an..3	**O**		Use ISO 3166 two alpha country code.
9213	Duty regime type code	C an..3	**O**		
4183	Special condition code	C an..3	**O**		6 = Subject to bonus
4183	Special condition code	C an..3	**O**		
4183	Special condition code	C an..3	**O**		
4183	Special condition code	C an..3	**O**		
4183	Special condition code	C an..3	**O**		

Segment Notes:

This segment is used to indicate special conditions or the country of origin of the current line item.

Example:
ALI+HK'

5. Segments Layout

Segment number: 27

SG27	- M	200000	-	LIN-PIA-IMD-MEA-QTY-ALI-DTM-FTX-SG29-SG31-SG32-SG33-SG34-SG39-SG46-SG52-SG54
DTM	- C	35	-	Date/time/period

Function:

To specify date, and/or time, or period.

		EDIFACT	GS1	*	Description
C507	DATE/TIME/PERIOD	M	**M**		
2005	Date or time or period function code qualifier	M an..3	**M**		44 = Availability 94 = Production/manufacture date 169 = Lead time
2380	Date or time or period value	C an..35	**R**		
2379	Date or time or period format code	C an..3	**R**		102 = CCYYMMDD 718 = CCYYMMDD-CCYYMMDD

Segment Notes:

This segment is used to indicate any dates relating to the current line item such as availability dates, manufacturing dates, or lead times.

Example:
DTM+44:20020201:102'

5. Segments Layout

Segment number: 28

SG27	- M	200000 -	LIN-PIA-IMD-MEA-QTY-ALI-DTM-FTX-SG29-SG31-SG32-SG33-SG34-SG39-SG46-SG52-SG54
FTX	- C	99 -	Free text

Function:

To provide free form or coded text information.

		EDIFACT	GS1	*	Description
4451	Text subject code qualifier	M an..3	**M**		PUR = Purchasing information QUT = Quotation instruction/information ZZZ = Mutually defined
4453	Free text function code	C an..3	**O**	*	1 = Text for subsequent use
C107	TEXT REFERENCE	C	**D**		References to a standard text. This composite is only used when trading partners have agreed to use mutually defined code values.
4441	Free text value code	M an..17	**M**		001 = ...Standard text....
1131	Code list identification code	C an..17	**O**		
3055	Code list responsible agency code	C an..3	**D**		91 = Assigned by supplier or supplier's agent 92 = Assigned by buyer or buyer's agent
C108	TEXT LITERAL	C	**D**		This composite is only used if coded text can not be used.
4440	Free text value	M an..512	**M**		
4440	Free text value	C an..512	**O**		
4440	Free text value	C an..512	**O**		
4440	Free text value	C an..512	**O**		
4440	Free text value	C an..512	**O**		
3453	Language name code	C an..3	**D**		ISO 639 two alpha code This data element is only used when non coded free text has been provided in data element C108.
4447	Free text format code	C an..3	**N**		

Segment Notes:

This segment is used to provide any free text information related to the current line item.
Use of this segment in free form is not recommended since it inhibits automatic processing of the Quotation.
Coded references to standard texts is an available functionality which enables automatic processing and reduces transmission overheads. Standard texts should be mutually defined among trading partners and can be used to cover legal and other requirements.

Example:
FTX+ZZZ+1+001::91'
Standard text 001 = 'Please refer to latest contract and price catalogues for further information.'

5. Segments Layout

Segment number: 29

SG27	- M	200000	-	LIN-PIA-IMD-MEA-QTY-ALI-DTM-FTX-SG29-SG31-SG32-SG33-SG34-SG39-SG46-SG52-SG54
SG29	- C	100	-	MOA
MOA	- M	1	-	Monetary amount

Function:

To specify a monetary amount.

		EDIFACT	GS1	*	Description
C516	MONETARY AMOUNT	M	**M**		
5025	Monetary amount type code qualifier	M an..3	**M**		203 = Line item amount
5004	Monetary amount	C n..35	**R**		
6345	Currency identification code	C an..3	**N**		
6343	Currency type code qualifier	C an..3	**N**		
4405	Status description code	C an..3	**N**		

Segment Notes:

This segment is used to indicate net amounts for the currently quoted line item.

Example:
MOA+203:1253.42'

5. Segments Layout

Segment number: 30

SG27	- M	200000 -	LIN-PIA-IMD-MEA-QTY-ALI-DTM-FTX-SG29-SG31-SG32-SG33-SG34-SG39-SG46-SG52-SG54
SG31	- C	99 -	PRI-RNG-CUX-DTM
PRI	- M	1 -	Price details

Function:

To specify price information.

		EDIFACT	GS1	*	Description
C509	PRICE INFORMATION	C	**R**		
5125	Price code qualifier	M an..3	**M**		AAA = Calculation net AAB = Calculation gross AAE = Information price, excluding allowances or charges, including taxes AAF = Information price, excluding allowances or charges and taxes Code AAA: The price stated is the net price including all allowances and charges and excluding taxes. Allowances and charges may be stated for information purposes only. Code AAB: The price stated is the gross price excluding all allowances, charges and taxes. Allowances and charges must be stated for net calculation purposes.
5118	Price amount	C n..15	**R**		
5375	Price type code	C an..3	**O**		CA = Catalogue CT = Contract
5387	Price specification code	C an..3	**O**		AAE = Not subject to fluctuation DPR = Discount price PRP = Promotional price
5284	Unit price basis value	C n..9	**D**		
6411	Measurement unit code	C an..3	**D**		
5213	Sub-line item price change operation code	C an..3	**N**		

Segment Notes:

This segment is used to indicate the price information for the current line item.

Example:
PRI+AAB:14.58:CT:DPR'

Dependency Notes:
Data elements 5284 and 6411 are used when a product is a variable quantity product, e.g. price per 200 kilos, or when the unit of measure for purchasing, delivery, and invoicing are different for a product, e.g. sugar is not a variable quantity product but ordered and delivered in packs, and invoiced in kilos or tonnes.

5. Segments Layout

Segment number: 31

SG27	- M	200000	-	LIN-PIA-IMD-MEA-QTY-ALI-DTM-FTX-SG29-SG31-SG32-SG33-SG34-SG39-SG46-SG52-SG54
SG31	- C	99	-	PRI-RNG-CUX-DTM
RNG	- C	1	-	Range details

Function:

To identify a range.

		EDIFACT	GS1	*	Description
6167	Range type code qualifier	M an..3	**M**		15 = Order quantity range, cumulative
C280	RANGE	C	**R**		
6411	Measurement unit code	M an..3	**M**		PCE = Piece (GS1 Temporary Code) H87 = Piece
6162	Range minimum value	C n..18	**A**		
6152	Range maximum value	C n..18	**O**		

Segment Notes:

This segment is used to indicate ranges to which the price information applies.

Example:
RNG+15+PCE:2000'

5. Segments Layout

Segment number: 32

SG27	- M	200000 -	LIN-PIA-IMD-MEA-QTY-ALI-DTM-FTX-SG29-SG31-SG32-SG33-SG34-SG39-SG46-SG52-SG54
SG31	- C	99 -	PRI-RNG-CUX-DTM
CUX	- C	5 -	Currencies

Function:

To specify currencies used in the transaction and relevant details for the rate of exchange.

		EDIFACT	GS1	*	Description
C504	CURRENCY DETAILS	C	**R**		
6347	Currency usage code qualifier	M an..3	**M**	*	2 = Reference currency
6345	Currency identification code	C an..3	**R**		ISO 4217 three alpha
6343	Currency type code qualifier	C an..3	**R**	*	4 = Invoicing currency 10 = Pricing currency 11 = Payment currency
6348	Currency rate value	C n..4	**N**		
C504	CURRENCY DETAILS	C	**D**		The second occurrence of this composite if only used is a target currency is being specified.
6347	Currency usage code qualifier	M an..3	**M**	*	3 = Target currency
6345	Currency identification code	C an..3	**R**		ISO 4217 three alpha
6343	Currency type code qualifier	C an..3	**R**	*	4 = Invoicing currency 10 = Pricing currency 11 = Payment currency
6348	Currency rate value	C n..4	**O**		
5402	Currency exchange rate	C n..12	**D**		The rate of exchange which applies to the currencies. The rate of exchange is only used if a target currency has been identified in the second occurrence of C504.
6341	Exchange rate currency market identifier	C an..3	**N**		

Segment Notes:

This segment is used to specify currency information for the price detailed above.
The CUX Segment is mandatory for international exchanges.
When specifying Reference and Target Currencies for international trade, one occurrence of CUX is all that is required. The reference currency is identified in the first occurrence of composite C504, with the target currency specified in the second occurrence of C504. The rate of exchange between the two is detailed in DE 5402.
The general rule for calculating the rate of exchange is as follows :
Reference Currency multiplied by Rate = Target Currency.

Example:
CUX+2:EUR:4'
Where only the invoicing currency needs to be identified for national trade.

CUX+2:EUR:4+3:USD:11+0.90243'

5. Segments Layout

Segment number: 33

SG27	- M	200000	-	LIN-PIA-IMD-MEA-QTY-ALI-DTM-FTX-SG29-SG31-SG32-SG33-SG34-SG39-SG46-SG52-SG54
SG31	- C	99	-	PRI-RNG-CUX-DTM
DTM	- C	5	-	Date/time/period

Function:

To specify date, and/or time, or period.

		EDIFACT	GS1	*	Description
C507	DATE/TIME/PERIOD	M	**M**		
2005	Date or time or period function code qualifier	M an..3	**M**		21E = End validity date (GS1 Temporary Code)
2380	Date or time or period value	C an..35	**R**		
2379	Date or time or period format code	C an..3	**R**		102 = CCYYMMDD 203 = CCYYMMDDHHMM 718 = CCYYMMDD-CCYYMMDD

Segment Notes:

This segment is used to specify the dates (and possibly times) associated with the price of the currently identified product.

Example:
DTM+21E:20020202:102'

5. Segments Layout

Segment number: 34

SG27	- M	200000 -	LIN-PIA-IMD-MEA-QTY-ALI-DTM-FTX-SG29-SG31-SG32-SG33-SG34-SG39-SG46-SG52-SG54
SG32	- C	9999 -	RFF-DTM
RFF	- M	1 -	Reference

Function:

To specify a reference.

		EDIFACT	GS1	*	Description
C506	REFERENCE	M	**M**		
1153	Reference code qualifier	M an..3	**M**		CR = Customer reference number CT = Contract number PL = Price list number PR = Price quote number
1154	Reference identifier	C an..70	**R**		
1156	Document line identifier	C an..6	**N**		
4000	Reference version identifier	C an..35	**N**		
1060	Revision identifier	C an..6	**N**		

Segment Notes:

This segment is used to specify any additional references which are applicable to the current line item only.

Example:
RFF+PL:DEC199321'

5. Segments Layout

Segment number: 35

SG27	- M	200000 -	LIN-PIA-IMD-MEA-QTY-ALI-DTM-FTX-SG29-SG31-SG32-SG33-SG34-SG39-SG46-SG52-SG54
SG32	- C	9999 -	RFF-DTM
DTM	- C	5 -	Date/time/period

Function:

To specify date, and/or time, or period.

		EDIFACT	GS1	*	Description
C507	DATE/TIME/PERIOD	M	**M**		
2005	Date or time or period function code qualifier	M an..3	**M**	*	171 = Reference date/time
2380	Date or time or period value	C an..35	**R**		
2379	Date or time or period format code	C an..3	**R**		102 = CCYYMMDD 718 = CCYYMMDD-CCYYMMDD

Segment Notes:

This segment is used to specify dates and times associated with the previous RFF segment.

Example:
DTM+171:20021215:102'

5. Segments Layout

Segment number: 36

SG27	- M	200000 -	LIN-PIA-IMD-MEA-QTY-ALI-DTM-FTX-SG29-SG31-SG32-SG33-SG34-SG39-SG46-SG52-SG54
SG33	- C	100 -	LOC-QTY-DTM
LOC	- M	1 -	Place/location identification

Function:

To identify a place or a location and/or related locations.

		EDIFACT	GS1	*	Description
3227	Location function code qualifier	M an..3	**M**	*	7 = Place of delivery
C517	LOCATION IDENTIFICATION	C	**A**		
3225	Location name code	C an..25	**R**		GLN - Format n13
1131	Code list identification code	C an..17	**O**		
3055	Code list responsible agency code	C an..3	**D**		DE 3055 must be used if DE 3225 is used and does not contain an UN/LOCODE. 9 = GS1
3224	Location name	C an..256	**O**		
C519	RELATED LOCATION ONE IDENTIFICATION	C	**O**		
3223	First related location name code	C an..25	**R**		GLN - Format n13
1131	Code list identification code	C an..17	**O**		
3055	Code list responsible agency code	C an..3	**D**		DE 3055 must be used if DE 3223 is used and does not contain an UN/LOCODE. 9 = GS1
3222	First related location name	C an..70	**O**		
C553	RELATED LOCATION TWO IDENTIFICATION	C	**O**		
3233	Second related location name code	C an..25	**R**		GLN - Format n13
1131	Code list identification code	C an..17	**O**		
3055	Code list responsible agency code	C an..3	**D**		DE 3055 must be used if DE 3233 is used and does not contain an UN/LOCODE. 9 = GS1
3232	Second related location name	C an..70	**O**		
5479	Relation code	C an..3	**N**		

Segment Notes:

This segment is used to identify the location of delivery for a split delivery order.

Example:
LOC+7+4012345500004::9'

5. Segments Layout

Segment number: 37

SG27	- M	200000 -	LIN-PIA-IMD-MEA-QTY-ALI-DTM-FTX-SG29-SG31-SG32-SG33-SG34-SG39-SG46-SG52-SG54
SG33	- C	100 -	LOC-QTY-DTM
QTY	- C	1 -	Quantity

Function:

To specify a pertinent quantity.

		EDIFACT	GS1	*	Description
C186	QUANTITY DETAILS	M	**M**		
6063	Quantity type code qualifier	M an..3	**M**	*	11 = Split quantity
6060	Quantity	M an..35	**M**		
6411	Measurement unit code	C an..3	**D**		

Segment Notes:

This segment is used to indicate the delivery quantity for the delivery location specified in the previous LOC segment. The total of all quantities specified in segment group 33 for the line, must equal the value for the total quantity detailed in the QTY segment at line level.

Example:
QTY+11:14'

5. Segments Layout

Segment number: 38

SG27	- M	200000 -	LIN-PIA-IMD-MEA-QTY-ALI-DTM-FTX-SG29-SG31-SG32-SG33-SG34-SG39-SG46-SG52-SG54
SG33	- C	100 -	LOC-QTY-DTM
DTM	- C	5 -	Date/time/period

Function:

To specify date, and/or time, or period.

		EDIFACT	GS1	*	Description
C507	DATE/TIME/PERIOD	M	**M**		
2005	Date or time or period function code qualifier	M an..3	**M**	*	2 = Delivery date/time, requested 10 = Shipment date/time, requested 11 = Despatch date and/or time 61 = Cancel if not delivered by this date 63 = Delivery date/time, latest 64 = Delivery date/time, earliest 69 = Delivery date/time, promised for 74 = Delivery date/time, requested for (prior to and including) X14 = Requested for delivery week commencing (GS1 Temporary Code) 71 = Delivery date/time, requested for (after and including) 200 = Pick-up/collection date/time of cargo 364 = Minimum shelf life remaining at time of despatch period
2380	Date or time or period value	C an..35	**R**		
2379	Date or time or period format code	C an..3	**R**		

Segment Notes:

This segment is used to indicate the date, time or period on which the split delivery will take place to the location identified in the LOC segment.

Example:
DTM+2:20021215:102'

5. Segments Layout

Segment number: 39

SG27	- M	200000 -	LIN-PIA-IMD-MEA-QTY-ALI-DTM-FTX-SG29-SG31-SG32-SG33-SG34-SG39-SG46-SG52-SG54
SG34	- C	10 -	TAX
TAX	- M	1 -	Duty/tax/fee details

Function:

To specify relevant duty/tax/fee information.

		EDIFACT	GS1	*	Description
5283	Duty or tax or fee function code qualifier	M an..3	**M**		7 = Tax
C241	DUTY/TAX/FEE TYPE	C	**D**		
5153	Duty or tax or fee type name code	C an..3	**O**		GST = Goods and services tax IMP = Import tax VAT = Value added tax
1131	Code list identification code	C an..17	**O**		
3055	Code list responsible agency code	C an..3	**D**		
5152	Duty or tax or fee type name	C an..35	**O**		
C533	DUTY/TAX/FEE ACCOUNT DETAIL	C	**O**		
5289	Duty or tax or fee account code	M an..6	**M**		
1131	Code list identification code	C an..17	**O**		
3055	Code list responsible agency code	C an..3	**D**		
5286	Duty or tax or fee assessment basis value	C an..15	**O**		
C243	DUTY/TAX/FEE DETAIL	C	**A**		
5279	Duty or tax or fee rate code	C an..7	**O**		
1131	Code list identification code	C an..17	**O**		
3055	Code list responsible agency code	C an..3	**D**		
5278	Duty or tax or fee rate	C an..17	**R**		
5273	Duty or tax or fee rate basis code	C an..12	**O**		
1131	Code list identification code	C an..17	**O**		
3055	Code list responsible agency code	C an..3	**D**		
5305	Duty or tax or fee category code	C an..3	**A**		A = Mixed tax rate E = Exempt from tax S = Standard rate
3446	Party tax identifier	C an..20	**N**		
1227	Calculation sequence code	C an..3	**N**		

Segment Notes:

This segment is used to indicate the type and rate of tax that is applicable for the current line item.

Example:

5. Segments Layout

Segment number: 39

TAX+7+VAT+++:::21+S'

Dependency Notes:
DE C241 and 5305: Tax types and categories will differ from country to country. They are to be defined in national guidelines.

5. Segments Layout

Segment number: 40

SG27	- M	200000 -	LIN-PIA-IMD-MEA-QTY-ALI-DTM-FTX-SG29-SG31-SG32-SG33-SG34-SG39-SG46-SG52-SG54
SG39	- C	99 -	PAC-QTY
PAC	- M	1 -	Package

Function:

To describe the number and type of packages/physical units.

		EDIFACT	GS1	*	Description
7224	Package quantity	C n..8	**O**		
C531	PACKAGING DETAILS	C	**O**		
7075	Packaging level code	C an..3	**N**		
7233	Packaging related description code	C an..3	**O**		50 = Package barcoded EAN-13 or EAN-8 51 = Package barcoded ITF-14 52 = Package barcoded UCC or EAN-128
7073	Packaging terms and conditions code	C an..3	**O**		1 = Packaging cost paid by supplier 2 = Packaging cost paid by recipient
C202	PACKAGE TYPE	C	**R**		
7065	Package type description code	C an..17	**A**		AE = CX = CS =
1131	Code list identification code	C an..17	**O**		
3055	Code list responsible agency code	C an..3	**D**		
7064	Type of packages	C an..35	**O**		
C402	PACKAGE TYPE IDENTIFICATION	C	**N**		
7077	Description format code	M an..3			
7064	Type of packages	M an..35			
7143	Item type identification code	C an..3			
7064	Type of packages	C an..35			
7143	Item type identification code	C an..3			
C532	RETURNABLE PACKAGE DETAILS	C	**D**		Composite C532 is only used where the packaging being described is returnable. This composite identifies who is responsible for the payment of its return.
8395	Returnable package freight payment responsibility code	C an..3	**O**		1 = Paid by customer 3 = Paid by supplier
8393	Returnable package load contents code	C an..3	**N**		

Segment Notes:

This segment is used to identify the type of packaging being used for the current line item.

Example:
PAC+1++CS'

5. Segments Layout

Segment number: 41

SG27	- M	200000	-	LIN-PIA-IMD-MEA-QTY-ALI-DTM-FTX-SG29-SG31-SG32-SG33-SG34-SG39-SG46-SG52-SG54
SG39	- C	99	-	PAC-QTY
QTY	- C	5	-	Quantity

Function:

To specify a pertinent quantity.

		EDIFACT	GS1	*	Description
C186	QUANTITY DETAILS	M	**M**		
6063	Quantity type code qualifier	M an..3	**M**	*	52 = Quantity per pack
6060	Quantity	M an..35	**M**		
6411	Measurement unit code	C an..3	**N**		

Segment Notes:

This segment is used to specify quantity contained in the pack for the line item being quoted.

Example:
QTY+52:40'

5. Segments Layout

Segment number: 42

SG27	- M	200000 -	LIN-PIA-IMD-MEA-QTY-ALI-DTM-FTX-SG29-SG31-SG32-SG33-SG34-SG39-SG46-SG52-SG54
SG46	- C	99 -	ALC-SG47-SG48-SG49-SG50-SG51
ALC	- M	1 -	Allowance or charge

Function:

To identify allowance or charge details.

		EDIFACT	GS1	*	Description
5463	Allowance or charge code qualifier	M an..3	**M**		A = Allowance C = Charge
C552	ALLOWANCE/CHARGE INFORMATION	C	**O**		
1230	Allowance or charge identifier	C an..35	**D**		If code '69' is used in DE 5189, the agreement number must be specified in DE 1230.
5189	Allowance or charge identification code	C an..3	**O**		69 = Charge for a customer specific finish
4471	Settlement means code	C an..3	**O**		
1227	Calculation sequence code	C an..3	**D**		1 = First step of calculation 2 = Second step of calculation etc, etc, etc, 9 = Ninth step of calculation The calculation sequence indicator is used when multiple allowances and/or charges are applicable. If various allowances and/or charges quantities, percentages, or, values are applicable to the same base price, then the calculation sequence indicator will always be equal to one. If the various allowances and/or charges are applied against a fluctuating price (constantly changing because of the application of other allowances and/or charges) then the sequence of the calculation is indicated using this data element. If the allowance or charge is not to be applied against a fixed price then the calculation sequence indicator must be included.
C214	SPECIAL SERVICES IDENTIFICATION	C	**O**		
7161	Special service description code	C an..3	**R**		AJ = Adjustments CAC = Cash discount FC = Freight charge QD = Quantity discount
1131	Code list identification code	C an..17	**O**		
3055	Code list responsible agency code	C an..3	**D**		
7160	Special service description	C an..35	**O**		
7160	Special service description	C an..35	**O**		

Segment Notes:

This segment is used to indicate whether any allowances or charges applicable to the current line item.

Example:
ALC+A+++1'

5. Segments Layout

Segment number: 43

SG27	- M	200000	-	LIN-PIA-IMD-MEA-QTY-ALI-DTM-FTX-SG29-SG31-SG32-SG33-SG34-SG39-SG46-SG52-SG54
SG46	- C	99	-	ALC-SG47-SG48-SG49-SG50-SG51
SG47	- C	10	-	QTY-RNG
QTY	- M	1	-	Quantity

Function:

To specify a pertinent quantity.

		EDIFACT	GS1	*	Description
C186	QUANTITY DETAILS	M	**M**		
6063	Quantity type code qualifier	M an..3	**M**		1 = Discrete quantity
6060	Quantity	M an..35	**M**		
6411	Measurement unit code	C an..3	**D**		KGM = kilogram This DE is only used if the product being quoted is of variable weight.

Segment Notes:

This segment is used to specify quantity allowances or charges for the line item being quoted.

Example:
QTY+1:40'

5. Segments Layout

Segment number: 44

SG27	- M	200000	-	LIN-PIA-IMD-MEA-QTY-ALI-DTM-FTX-SG29-SG31-SG32-SG33-SG34-SG39-SG46-SG52-SG54
SG46	- C	99	-	ALC-SG47-SG48-SG49-SG50-SG51
SG47	- C	10	-	QTY-RNG
RNG	- C	1	-	Range details

Function:

To identify a range.

		EDIFACT	GS1	*	Description
6167	Range type code qualifier	M an..3	**M**		4 = Quantity range
C280	RANGE	C	**R**		
6411	Measurement unit code	M an..3	**M**		KGM = kilogram LTR = litre H87 = Piece
6162	Range minimum value	C n..18	**A**		
6152	Range maximum value	C n..18	**O**		

Segment Notes:

This segment is used to indicate ranges which must be satisfied before which the quantity allowance or charge becomes effective.

Example:
RNG+4+PCE:250:350'

5. Segments Layout

Segment number: 45

SG27	- M	200000	-	LIN-PIA-IMD-MEA-QTY-ALI-DTM-FTX-SG29-SG31-SG32-SG33-SG34-SG39-SG46-SG52-SG54
SG46	- C	99	-	ALC-SG47-SG48-SG49-SG50-SG51
SG48	- C	10	-	PCD-RNG
PCD	- M	1	-	Percentage details

Function:

To specify percentage information.

		EDIFACT	GS1	*	Description
C501	PERCENTAGE DETAILS	M	**M**		
5245	Percentage type code qualifier	M an..3	**M**		3 = Allowance or charge
5482	Percentage	C n..10	**R**		
5249	Percentage basis identification code	C an..3	**O**		
1131	Code list identification code	C an..17	**O**		
3055	Code list responsible agency code	C an..3	**D**		
4405	Status description code	C an..3	**N**		

Segment Notes:

This segment is used to specify percentage allowances or charges for the line item being quoted.

Example:
PCD+3:18.5'

5. Segments Layout

Segment number: 46

SG27	- M	200000	-	LIN-PIA-IMD-MEA-QTY-ALI-DTM-FTX-SG29-SG31-SG32-SG33-SG34-SG39-SG46-SG52-SG54
SG46	- C	99	-	ALC-SG47-SG48-SG49-SG50-SG51
SG48	- C	10	-	PCD-RNG
RNG	- C	1	-	Range details

Function:

To identify a range.

		EDIFACT	GS1	*	Description
6167	Range type code qualifier	M an..3	**M**		1 = Allowance range 2 = Charge range
C280	RANGE	C	**R**		
6411	Measurement unit code	M an..3	**M**		KGM = kilogram LTR = litre H87 = Piece
6162	Range minimum value	C n..18	**A**		
6152	Range maximum value	C n..18	**O**		

Segment Notes:

This segment is used to indicate ranges which must be satisfied before which the percentage allowance or charge becomes effective.

Example:
RNG+1+PCE:50'

5. Segments Layout

Segment number: 47

SG27	- M	200000	-	LIN-PIA-IMD-MEA-QTY-ALI-DTM-FTX-SG29-SG31-SG32-SG33-SG34-SG39-SG46-SG52-SG54
SG46	- C	99	-	ALC-SG47-SG48-SG49-SG50-SG51
SG49	- C	10	-	MOA-RNG
MOA	- M	1	-	Monetary amount

Function:

To specify a monetary amount.

		EDIFACT	GS1	*	Description
C516	MONETARY AMOUNT	M	**M**		
5025	Monetary amount type code qualifier	M an..3	**M**		8 = Allowance or charge amount
5004	Monetary amount	C n..35	**R**		
6345	Currency identification code	C an..3	**N**		
6343	Currency type code qualifier	C an..3	**N**		
4405	Status description code	C an..3	**N**		

Segment Notes:

This segment is used to specify monetary value allowances or charges for the line item being quoted.

Example:
MOA+8:5000'

5. Segments Layout

Segment number: 48

SG27	- M	200000	-	LIN-PIA-IMD-MEA-QTY-ALI-DTM-FTX-SG29-SG31-SG32-SG33-SG34-SG39-SG46-SG52-SG54
SG46	- C	99	-	ALC-SG47-SG48-SG49-SG50-SG51
SG49	- C	10	-	MOA-RNG
RNG	- C	1	-	Range details

Function:

To identify a range.

		EDIFACT	GS1	*	Description
6167	Range type code qualifier	M an..3	**M**		3 = Monetary range
C280	RANGE	C	**R**		
6411	Measurement unit code	M an..3	**M**		KGM = kilogram LTR = litre H87 = Piece
6162	Range minimum value	C n..18	**A**		
6152	Range maximum value	C n..18	**O**		

Segment Notes:

This segment is used to indicate ranges which must be satisfied before which the monetary allowance or charge becomes effective.

Example:
RNG+3+PCE:1500:2000'

5. Segments Layout

Segment number: 49

SG27	- M	200000	-	LIN-PIA-IMD-MEA-QTY-ALI-DTM-FTX-SG29-SG31-SG32-SG33-SG34-SG39-SG46-SG52-SG54
SG46	- C	99	-	ALC-SG47-SG48-SG49-SG50-SG51
SG50	- C	10	-	RTE-RNG
RTE	- M	1	-	Rate details

Function:

To specify rate information.

		EDIFACT	GS1	*	Description
C128	RATE DETAILS	M	**M**		
5419	Rate type code qualifier	M an..3	**M**		1 = Allowance rate 2 = Charge rate
5420	Unit price basis rate	M n..15	**M**		
5284	Unit price basis value	C n..9	**A**		
6411	Measurement unit code	C an..3	**O**		
4405	Status description code	C an..3	**N**		

Segment Notes:

This segment is used to specify rate allowances or charges for the line item being quoted.

Example:
RTE+2:5.5'

5. Segments Layout

Segment number: 50

SG27	- M	200000	-	LIN-PIA-IMD-MEA-QTY-ALI-DTM-FTX-SG29-SG31-SG32-SG33-SG34-SG39-SG46-SG52-SG54
SG46	- C	99	-	ALC-SG47-SG48-SG49-SG50-SG51
SG50	- C	10	-	RTE-RNG
RNG	- C	1	-	Range details

Function:

To identify a range.

		EDIFACT	GS1	*	Description
6167	Range type code qualifier	M an..3	**M**		1 = Allowance range 2 = Charge range
C280	RANGE	C	**R**		
6411	Measurement unit code	M an..3	**M**		
6162	Range minimum value	C n..18	**O**		
6152	Range maximum value	C n..18	**O**		

Segment Notes:

This segment is used to indicate ranges which must be satisfied before which the rate allowance or charge becomes effective.

Example:
RNG+1+KGM:650:1200'

5. Segments Layout

Segment number: 51

SG27	- M	200000 -	LIN-PIA-IMD-MEA-QTY-ALI-DTM-FTX-SG29-SG31-SG32-SG33-SG34-SG39-SG46-SG52-SG54
SG46	- C	99 -	ALC-SG47-SG48-SG49-SG50-SG51
SG51	- C	5 -	TAX-MOA
TAX	- M	1 -	Duty/tax/fee details

Function:

To specify relevant duty/tax/fee information.

		EDIFACT	GS1	*	Description
5283	Duty or tax or fee function code qualifier	M an..3	**M**		7 = Tax
C241	DUTY/TAX/FEE TYPE	C	**D**		
5153	Duty or tax or fee type name code	C an..3	**O**		GST = Goods and services tax IMP = Import tax VAT = Value added tax
1131	Code list identification code	C an..17	**O**		
3055	Code list responsible agency code	C an..3	**D**		
5152	Duty or tax or fee type name	C an..35	**O**		
C533	DUTY/TAX/FEE ACCOUNT DETAIL	C	**O**		
5289	Duty or tax or fee account code	M an..6	**M**		
1131	Code list identification code	C an..17	**O**		
3055	Code list responsible agency code	C an..3	**D**		
5286	Duty or tax or fee assessment basis value	C an..15	**O**		
C243	DUTY/TAX/FEE DETAIL	C	**A**		
5279	Duty or tax or fee rate code	C an..7	**O**		
1131	Code list identification code	C an..17	**O**		
3055	Code list responsible agency code	C an..3	**D**		
5278	Duty or tax or fee rate	C an..17	**R**		
5273	Duty or tax or fee rate basis code	C an..12	**O**		
1131	Code list identification code	C an..17	**O**		
3055	Code list responsible agency code	C an..3	**D**		
5305	Duty or tax or fee category code	C an..3	**A**		A = Mixed tax rate E = Exempt from tax S = Standard rate
3446	Party tax identifier	C an..20	**O**		
1227	Calculation sequence code	C an..3	**N**		

Segment Notes:

This segment is used to indicate any taxes which may be applicable against the allowances and/or charges information specified in the ALC segment group.

5. Segments Layout

Segment number: 51

Example:
TAX+7+GST+++:::15+S'

Dependency Notes:
DE C241 and 5305: Tax types and categories will differ from country to country. They are to be defined in national guidelines.

5. Segments Layout

Segment number: 52

SG27	- M	200000	-	LIN-PIA-IMD-MEA-QTY-ALI-DTM-FTX-SG29-SG31-SG32-SG33-SG34-SG39-SG46-SG52-SG54
SG46	- C	99	-	ALC-SG47-SG48-SG49-SG50-SG51
SG51	- C	5	-	TAX-MOA
MOA	- C	1	-	Monetary amount

Function:

To specify a monetary amount.

		EDIFACT	GS1	*	Description
C516	MONETARY AMOUNT	M	**M**		
5025	Monetary amount type code qualifier	M an..3	**M**		124 = Tax amount 125 = Taxable amount
5004	Monetary amount	C n..35	**R**		
6345	Currency identification code	C an..3	**N**		
6343	Currency type code qualifier	C an..3	**N**		
4405	Status description code	C an..3	**N**		

Segment Notes:

This segment is used to specify in monetary terms the amount of tax due for the allowances or charges for the current line item.

Example:
MOA+124:21.80'

5. Segments Layout

Segment number: 53

SG27	- M	200000 -	LIN-PIA-IMD-MEA-QTY-ALI-DTM-FTX-SG29-SG31-SG32-SG33-SG34-SG39-SG46-SG52-SG54
SG52	- C	10 -	TDT
TDT	- M	1 -	Details of transport

Function:

To specify the transport details such as mode of transport, means of transport, its conveyance reference number and the identification of the means of transport.

		EDIFACT	GS1	*	Description
8051	Transport stage code qualifier	M an..3	**M**		20 = Main-carriage transport
8028	Means of transport journey identifier	C an..17	**O**		Reference number covering the transport.
C220	MODE OF TRANSPORT	C	**A**		
8067	Transport mode name code	C an..3	**R**		10 = 20 = 30 = 40 =
8066	Transport mode name	C an..17	**N**		
C228	TRANSPORT MEANS	C	**D**		Composite C228 is only used when the type of transport must be specifically identified, that is, a generic description such as road transport is unsuitable.
8179	Transport means description code	C an..8	**O**		23 = Rail bulk car 31 = Truck 32 = Road tanker
8178	Transport means description	C an..17	**O**		
C040	CARRIER	C	**O**		
3127	Carrier identifier	C an..17	**A**		GLN - Format n13
1131	Code list identification code	C an..17	**O**		
3055	Code list responsible agency code	C an..3	**D**		9 = GS1
3128	Carrier name	C an..35	**O**		
8101	Transit direction indicator code	C an..3	**O**		BS = Buyer to supplier SB = Supplier to buyer
C401	EXCESS TRANSPORTATION INFORMATION	C	**N**		
8457	Excess transportation reason code	M an..3			
8459	Excess transportation responsibility code	M an..3			
7130	Customer shipment authorisation identifier	C an..17			
C222	TRANSPORT IDENTIFICATION	C	**O**		
8213	Transport means identification name identifier	C an..9	**O**		
1131	Code list identification code	C an..17	**O**		
3055	Code list responsible agency	C an..3	**D**		DE 3055 must be used if DE 8213 is used.

5. Segments Layout

Segment number: 53

		EDIFACT	GS1	*	Description
	code				
8212	Transport means identification name	C an..35	**R**		Vehicle license plate/Aircraft number
8453	Transport means nationality code	C an..3	**O**		ISO 3166 two alpha code
8281	Transport means ownership indicator code	C an..3	**N**		

Segment Notes:

This segment is used to specify the means of transport which will be required to deliver the current line item.

Example:
TDT+20++30+31'

5. Segments Layout

Segment number: 54

SG27	- M	200000 -	LIN-PIA-IMD-MEA-QTY-ALI-DTM-FTX-SG29-SG31-SG32-SG33-SG34-SG39-SG46-SG52-SG54
SG54	- C	100 -	SCC-SG55
SCC	- M	1 -	Scheduling conditions

Function:

To specify scheduling conditions.

		EDIFACT	GS1	*	Description
4017	Delivery plan commitment level code	M an..3	**M**		1 = Firm 10 = Immediate 12 = Planning
4493	Delivery instruction code	C an..3	**O**		
C329	PATTERN DESCRIPTION	C	**O**		
2013	Frequency code	C an..3	**O**		M = Monthly (calendar months) Q = Quarterly (calendar quarters) S = Semi-annually (calendar year) W = Weekly Y = Daily
2015	Despatch pattern code	C an..3	**O**		13 = Monday 14 = Tuesday 15 = Wednesday 16 = Thursday 17 = Friday 18 = Saturday
2017	Despatch pattern timing code	C an..3	**O**		D = A.M. E = P.M.

Segment Notes:

This segment is used to indicate delivery schedules for the line item being quoted.

Example:
SCC+1++W:14:D'
Firm schedule every Tuesday morning.

5. Segments Layout

Segment number: 55

SG27	- M	200000	-	LIN-PIA-IMD-MEA-QTY-ALI-DTM-FTX-SG29-SG31-SG32-SG33-SG34-SG39-SG46-SG52-SG54
SG54	- C	100	-	SCC-SG55
SG55	- C	10	-	QTY-DTM
QTY	- M	1	-	Quantity

Function:

To specify a pertinent quantity.

		EDIFACT	GS1	*	Description
C186	QUANTITY DETAILS	M	**M**		
6063	Quantity type code qualifier	M an..3	**M**		40 = Normal delivery 113 = Quantity to be delivered
6060	Quantity	M an..35	**M**		
6411	Measurement unit code	C an..3	**D**		This DE is only used if the product to be delivered is of variable weight.

Segment Notes:

This segment is used to specify the delivery quantity for a delivery schedule.

Example:
QTY+113:400'

5. Segments Layout

Segment number: 56

SG27	- M	200000 -	LIN-PIA-IMD-MEA-QTY-ALI-DTM-FTX-SG29-SG31-SG32-SG33-SG34-SG39-SG46-SG52-SG54
SG54	- C	100 -	SCC-SG55
SG55	- C	10 -	QTY-DTM
DTM	- C	5 -	Date/time/period

Function:

To specify date, and/or time, or period.

		EDIFACT	GS1	*	Description
C507	DATE/TIME/PERIOD	M	**M**		
2005	Date or time or period function code qualifier	M an..3	**M**		63 = Delivery date/time, latest 64 = Delivery date/time, earliest 69 = Delivery date/time, promised for
2380	Date or time or period value	C an..35	**R**		
2379	Date or time or period format code	C an..3	**R**		102 = CCYYMMDD 718 = CCYYMMDD-CCYYMMDD

Segment Notes:

This segment is used to indicate dates related to the quantities in the delivery schedule.

Example:
DTM+64:20020110:102'
DTM+63:20020112:102'
The earliest delivery will be made is the 10th of January 2002, the latest is the 12th of January 2002.

5. Segments Layout

Segment number: 57

UNS - M 1 - Section control				
Function: To separate header, detail and summary sections of a message. Notes: 1. To be used by message designers when required to avoid ambiguities. Mandatory only if specified for the type of message concerned.				
	EDIFACT	GS1	*	Description
0081 Section identification	M a1	**M**	*	S = Detail/summary section separation
Segment Notes: This segment is used to separate the detail and summary sections of the quotation message. Example: UNS+S'				

5. Segments Layout

Segment number: 58

MOA - C 15 - Monetary amount					
Function: To specify a monetary amount.					
		EDIFACT	GS1	*	Description
C516	MONETARY AMOUNT	M	**M**		
5025	Monetary amount type code qualifier	M an..3	**M**		79 = Total line items amount 86 = Message total monetary amount 176 = Message total duty/tax/fee amount 259 = Total charges 260 = Total allowances
5004	Monetary amount	C n..35	**R**		
6345	Currency identification code	C an..3	**N**		
6343	Currency type code qualifier	C an..3	**N**		
4405	Status description code	C an..3	**N**		

Segment Notes:

This segment is used to indicate total monetary amounts applicable to the complete quote, e.g. total value allowances and charges, total taxable amount, etc.

Example:
MOA+79:15000'
MOA+259:400'
MOA+260:1800'
Assuming that the currency of the quotation is EURO, the total value of the quote is 15000 EURO and the total value of the charges and allowances equalling 400 and 1800 EURO respectively.

5. Segments Layout

Segment number: 59

CNT - C 10 - Control total					
Function: To provide control total.					
		EDIFACT	GS1	*	Description
C270	CONTROL	M	**M**		
6069	Control total type code qualifier	M an..3	**M**	*	1 = Total value of the quantity segments at line level in a message 2 = Number of line items in message
6066	Control total value	M n..18	**M**		
6411	Measurement unit code	C an..3	**O**		
Segment Notes: This segment is used to provide message control totals. Example: CNT+2:45'					

5. Segments Layout

Segment number: 60

UNT - M 1 - Message trailer					
Function: To end and check the completeness of a message.					
		EDIFACT	GS1	*	Description
0074	Number of segments in the message	M n..6	**M**		The total number of segments in the message is detailed in here.
0062	Message reference number	M an..14	**M**		The message reference numbered detailed here should equal the one specified in the UNH segment.
Segment Notes: This segment is a mandatory UN/EDIFACT segment. It must always be the last segment in the message. Example: UNT+73+ME000001'					

6. Examples

The following is an example of a simple Quotation message for one line item between a supplier identified with GLN 4012345000009 and a buyer identified with GLN 5412345000013. The supplier identifies the contact who will handle any possible order as being N Schulte.

The quotation is dated the 1st January 2002 with a reference number QT8709. Two other references related to the quotation are included for the complete quotation, a contract reference 439776 dated the 21st November 2001, and a price list reference NOV2001. The supplier indicates the terms of payment as being 30 days after date of invoice.

The product is identified by GTIN 4012345111118. The suppliers internal article number AB7456 is also detailed as an additional identification. The quoted price for the product is 14.58 Euros and there is a minimum order quantity of 50. The product originates from Hong Kong and is subject to the standard rate of tax 21%.

UNH+ME000001+QUOTES:D:01B:UN:EAN004'	Message header
BGM+310+QT8709+9'	Quotation number QT8709
DTM+137:20020101:102'	Date of message 1st of January 2002
RFF+CT:439776'	Quotation relates to contract number 439776
DTM+171:20011121:102'	Contract date 21st November 2001
RFF+PL:NOV2001'	Quotation relates to price list number NOV2001
CUX+2:EUR:12'	Quotation currency is Euros (EUR)
PAT+1++5:3:D:30'	Basic payment terms are 30 days after date of invoice
NAD+BY+5412345000013::9'	Buyer is identified using GLN 5412345000010
RFF+VA:65541120'	Vat number of the buyer is 65541120
NAD+SU+4012345000009::9'	Supplier is identified using GLN 4012345000000
RFF+VA:83564151'	Vat number of the supplier is 83564151
CTA+OC+:N SCHULTE'	Contact person in supplier is N. Schulte
LIN+1++4012345111118:SRV'	Quotation product identified by GTIN 4012345111118
PIA+1+AB7456:SA'	Suppliers article number AB7456 provided as additional identification
QTY+53:50'	Minimum order quantity is 50 units
ALI+HK'	Country of origin is Hong Kong
PRI+AAB:14.58::DPR'	A discount calculation gross price of 14.58 EUR is quoted
TAX+7+VAT+++:::21+S'	Product is subject to Vat at a rate of 21%
UNS+S'	Message detail/summary separation
CNT+2:1'	Control number of LIN segments in the message
UNT+22+ME000001'	Total number of segments in the message equals 22

Note:
The EDI interchange will include the UNB..UNZ segments and, if applicable, the UNG..UNE segments (see part I,

section 5.7).